CH573/CH571 Datasheet

V1.12

Overview

CH573 is a RISC−V MCU integrated with BLE wireless communication. It integrates a BLE communication module, full-speed USB host and device controller and transceiver, SPI, 4 UARTs, ADC, touch−key detection module, RTC and other peripheral resources.

Features

- **Royalty-Free core:**
  - 32-bit Qingke RISC-V processor WCH RISC-V3A
  - Support RV32IMAC instruction set, hardware multiplication and division
  - Low power consumption 2-stage assembly line
  - Multi-speed system frequency: minimum 32 KHz
  - Unique high-speed interrupt response mechanism
- **512K bytes of non-volatile memory FlashROM:**
  - 448KB user application program memory area CodeFlash
  - 32KB user non-volatile data memory area DataFlash
  - 24KB system boot program memory area BootLoader
  - 8KB system non-volatile configuration information memory area InfoFlash
  - Support ICP, ISP and IAP, support OTA wireless upgrade
  - Basically, no waiting at the system frequency of 20MHz
- **18K bytes of volatile data storage SRAM:**
  - Sleep retention memory area RAM16K using 16KB dual power supply
  - Sleep retention memory area RAM2K using 2KB dual power supply
- **Power management and low power:**
  - Support 3.3V and 2.5V power, CH573X supports 1.8V
  - Built-in DC-DC conversion, current of 6mA at 0dBm TX power
  - Idle mode: 1.5mA
  - Halt mode: 320uA
  - Sleep mode: Multiple gears from 1.4uA to 6uA
  - Shutdown mode: Multiple gears from 0.3uA to 1.3uA
  - Optional low-voltage monitoring of low-power or high-precision battery voltage
- **Security properties:** AES-128 encryption and decryption, unique ID
- ***Bluetooth*® Low Energy(BLE):**
  - Integrated with 2.4GHz RF transceiver and baseband and link control
  - -96dBm RX sensitivity, programmable +5dBm TX power
  - BLE complies with Bluetooth Core Specification v4.2
  - The wireless communication distance is about 240 meters at 3dBm TX power
  - Provide optimized protocol stack and application layer API, and support networking
- **Universal serial bus (USB):**
  - Built-in USB controller and DMA, support 64-byte data packet
  - Integrated USB 2.0 full-speed transceiver PHY, no peripheral required
  - Support host and device mode at full speed/low speed
- **Real-time clock (RTC):** Support 2 modes of timing and triggering
- **Analog to digital conversion (ADC):**
  - 12-bit analog to digital converter, support differential and single-ended input
  - 10 external analog signal channels and 2 internal signal channels
- **Touchkey detection module:** 10 channels
- **Timer and pulse width modulation (PWM):**
  - 4 sets of 26-bit timers, which can reach 4.2S at the frequency of 16MHz
  - 4-channel capturing/sampling, support rising edge/falling edge/double edge
  - 4 channels of 26-bit PWM output, 8 channels of 8-bit PWM output

- **Universal asynchronous receiver/transmitter (UART):**
  - 4 independent UARTs, compatible with 16C550, built-in 8-level FIFO
  - 23-bit counter, communication baud rate is up to 6Mbps
  - UART0 supports some modems and supports automatic flow control of hardware
  - UART0 supports automatic matching of slave address during multi-computer communication
- **Serial peripheral interface (SPI):**
  - Built-in FIFO, support DMA
  - SCK serial clock frequency can reach half of system clock frequency
  - Support Master mode and Slave mode
- **Clock:** Built-in PLL, built-in 32KHz clock
- **Temperature sensor (TS)**
- **General purpose input/output (GPIO):**
  - 22 GPIOs, 4 of which support 5V signal input
  - Optional pull-up or pull-down resistors, optional output drive capability
  - All GPIOs support level or edge interrupt input
  - All GPIOs support level or edge wakeup input
- **Package:**

QFN28_4X4, QFN32_4X4, QFN20_3X3

CH571 is simplified based on CH573, without USB host, touchkey detection module, 8-bit PWM module or 2 UARTs. The total capacity of FlashROM is only 256KB. The ADC of CH571 does not support DMA. Only power voltages of 2.3V or above is supported. Except for the above differences, others are basically the same as CH573. Please directly refer to the CH573 datasheet and technical resources.

Part No.	User flash + Boot flash + Data flash	Data Memory RAM	RTC	Timer	Capture	PWM	UART	SPI host slave	BLE	ADC and TS	Capacitive Touch-key	PLL multiplier	USB host	USB device	DC-DC	Min. supply voltage	GPIO	Package
CH573X	448K+	16+2K	√	4	4	4+8	4	√	√	10+1	10	√	√	√	√	1.7V	22	QFN32
CH573F	24K+32K	16+2K			4	4+6				8+1	8		√	√	√	2.3V	20	QFN28
CH573Q	192K+ 24K+32K	16+2K			4	4+8	2			10+1	10		√	√	√	2.3V	22	LQFP32
CH571F		16+2K			4	4+0				6+1	0		×	√	√	2.3V	20	QFN28
CH571D		16+2K			3	3+0				6+1	0		×	√	×	2.3V	15	QFN20
CH571K		16+2K			0	0	1			4+1	0		×	×	×	2.3V	4	ESSOP10

Note: Due to the limitation of package form, the RF performance of CH573Q and CH571K is slightly lower than that of those in QFN packages.

Chapter 1 Pinouts and pin definitions

1.1 Pinouts

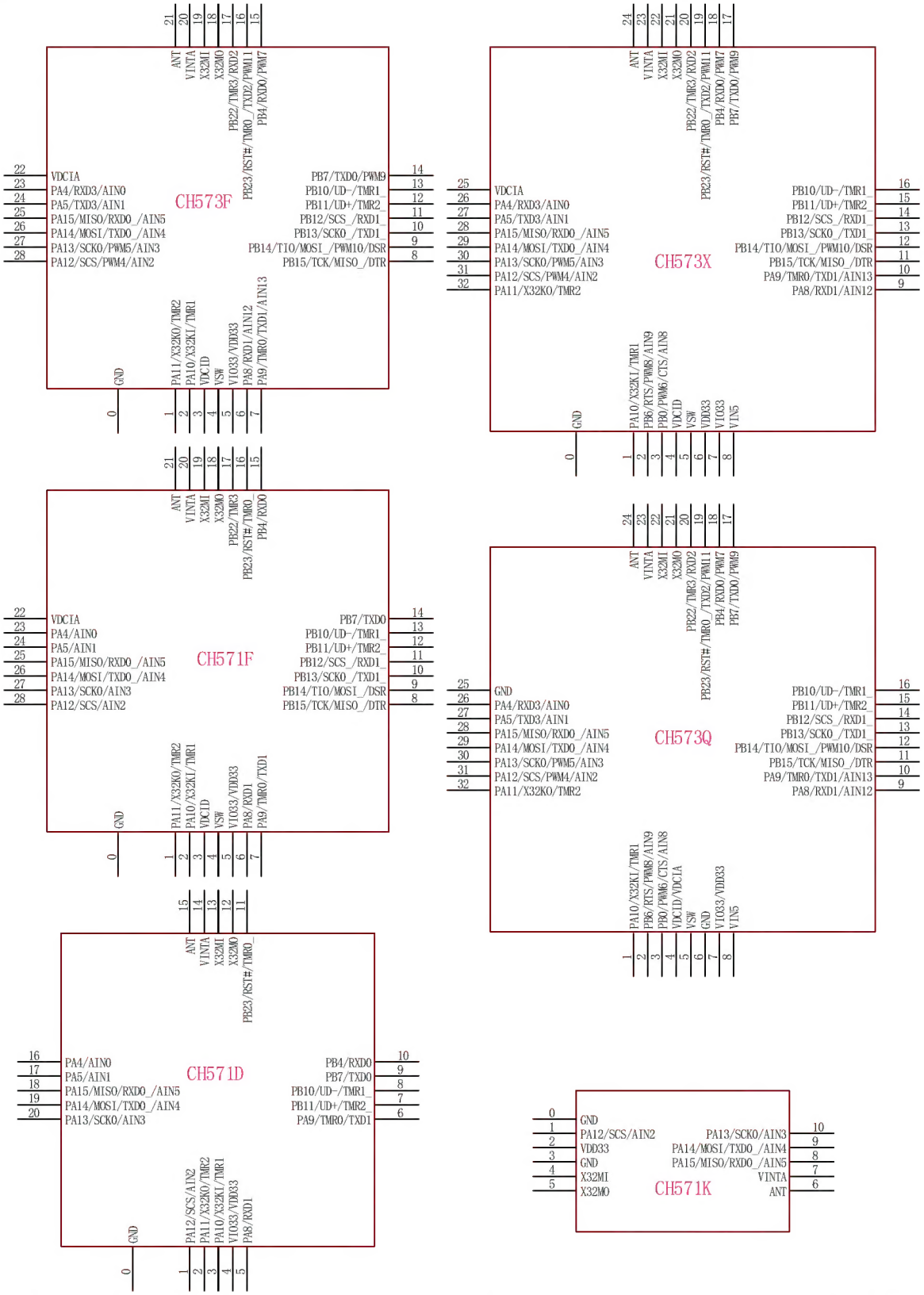

Note: Pin 0# refers to EPAD, it is unnecessary but strongly recommended to be connected for CH571K, and it is necessary to be connected for others.

Figure 1-1 Pinouts of CH573X, CH573F/CH571F, CH571D, CH571K and CH573Q

1.2 Pin definitions

QFN32 Pin No.	QFN28 Pin No.	Pin Name	Pin Type	Alternate function	Description
0	0	GND	Power	-	Common ground, voltage 0V reference point.
4	3	VDCID	Power	-	Power input of internal digital circuit LDO regulator, requires an external decoupling capacitor. 2.2uF is recommended (0.47uF~4.7uF supported, small capacitance causes little power saved and BLE sensitivity reduced 2dBm) when DC-DC is enabled. While 0.1uF or more is recommended when DC-DC is disabled.
5	4	VSW	Power	-	Internal DC-DC switch output, must be connected to VDCID with inductor in series close to the pin when DC-DC is enabled, and 22uH inductor is recommended (3.3uH~33uH supported). While it can be directly connected to VDCID when DC-DC is disabled.
6	5	VDD33	Power	VBAT	DC-DC or battery power input, requires an external decoupling capacitor close to pin. 2.2uF or 1uF is recommended when DC-DC is enabled, while 0.1uF is recommended when DC-DC is disabled.
7		VIO33	Power	-	I/O power input, requires an external decoupling capacitor close to the pin, and 0.1uF or more is recommended.
8	None	VIN5	Power	-	5V power input, output to VIO33 after simple internal voltage reduction.
9	6	PA8	I/O/A	RXD1 /AIN12	PA8: General-purpose bidirectional digital I/0 pin. RXD1: UART1 serial data input. AIN12: ADC analog signal input channel 12.
10	7	PA9	I/O/A	TMR0 /TXD1 /AIN13	PA9: General-purpose bidirectional digital I/0 pin. TMR0: Capture input 0 and PWM output channel 0 of timer 0. TXD1: UART1 serial data output. AIN13: ADC analog signal input channel 13.
11	8	PB15	I/O /5VT	TCK /MISO_ /DTR	PB15: General-purpose bidirectional digital I/0 pin. TCK: Serial clock input of 2-wire simulation and debugging interface. Note3 MISO_: MISO pin mapping of SPI0. DTR: MODEM output signal of UART0; data terminal is ready.
12	9	PB14	I/O /5VT	TIO /MOSI_ /PWM10 /DSR	PB14: General-purpose bidirectional digital I/0 pin. TIO: Serial data input and output of 2-wire simulation and debugging interface, built-in pull-up resistor. Note3 MOSI_: MOSI pin mapping of SPI0. PWM10: Pulse width modulation output channel 10. DTR: MODEM input signal of UART0; data device is ready.
13	10	PB13	I/O /5VT	SCK0_ /TXD1_	PB13: General-purpose bidirectional digital I/0 pin. SCK0_: SCK pin mapping of SPI0. TXD1_: TXD1 pin mapping of UART1.
14	11	PB12	I/O	SCS_	PB12: General-purpose bidirectional digital I/0 pin.

			/5VT	/RXD1_	SCS_: SCS pin mapping of SPI0. RXD1_: RXD1 pin mapping of UART1.
15	12	PB11	I/O/A	UD+ /TMR2_	PB11: General-purpose bidirectional digital I/0 pin. UD+: D+data line of USB bus. TMR2_: TMR2 pin mapping of timer 2.
16	13	PB10	I/O/A	UD- /TMR1_	PB10: General-purpose bidirectional digital I/0 pin. UD-: D-data line of USB bus. TMR1_: TMR1 pin mapping of timer 1.
17	14	PB7	I/O	TXD0 /PWM9	PB7: General-purpose bidirectional digital I/0 pin. TXD0: UART0 serial data output. PWM9: Pulse width modulation output channel 9.
18	15	PB4	I/O	RXD0 /PWM7	PB4: General-purpose bidirectional digital I/0 pin. RXD0: UART0 serial data input. PWM7: Pulse width modulation output channel 7.
19	16	PB23	I/O	RST# /TMR0_ /TXD2 /PWM11	PB23: General-purpose bidirectional digital I/0 pin. RST#: External reset input, active at low level, built-in pull-up resistor. TMR0_: TMR0 pin mapping of timer 0. TXD2: UART2 serial data output. PWM11: Pulse width modulation output channel 11.
20	17	PB22	I/O	TMR3 /RXD2	PB 22: General purpose bidirectional digital I/0 pin. TMR3: Capture input 3 and PWM output channel 3 of timer 3. RXD2: UART2 serial data input.
21	18	X32MO	I/A	-	Inverted output of high frequency oscillator HSE, connected to one end of external 32MHz crystal.
22	19	X32MI	A	-	Input of high frequency oscillator HSE, connected to the other end of external 32MHz crystal.
23	20	VINTA	Power	-	Power node of internal analog circuit, requires an external decoupling capacitor close to the pin. 1uF or 2.2uF is recommended when DC-DC is enabled (0.1uF~2.2uF supported, small capacitance causes little power saved and BLE sensitivity reduced 1dBm). While 0.1uF or more is recommended when DC-DC is disabled.
24	21	ANT	A	-	RF signal input and output, it is recommended to connect the antenna directly.
25	22	VDCIA	Power	-	Power input of internal analog circuit LDO regulator, requires an external decoupling capacitor. It is recommended not to be smaller than 0.1uF, and it is recommended to be connected to VDCID directly.
26	23	PA4	I/O/A	RXD3 /AIN0	PA4: General purpose bidirectional digital I/0 pin. RXD3: UART3 serial data input. AIN0: ADC analog signal input channel 0.
27	24	PA5	I/O/A	TXD3 /AIN1	PA5: General purpose bidirectional digital I/0 pin. TXD3: UART3 serial data output. AIN1: ADC analog signal input channel 1.
28	25	PA15	I/O/A	MISO /RXD0_ /AIN5	PA15: General purpose bidirectional digital I/0 pin. MISO: SPI0 serial data pin, host input/slave output. RXD0_: RXD0 pin mapping of UART0.

					AIN5: ADC analog signal input channel 5.
29	26	PA14	I/O/A	MOSI /TXD0_ /AIN4	PA14: General purpose bidirectional digital I/0 pin. MOSI: SPI0 serial data pin, host output/slave input. TXD0_: TXD0 pin mapping of UART0. AIN4: ADC analog signal input channel 4.
30	27	PA13	I/O/A	SCK0 /PWM5 /AIN3	PA13: General purpose bidirectional digital I/0 pin. SCK0: SPI0 serial clock pin, host output/slave input. PWM5: Pulse width modulation output channel 5. AIN3: ADC analog signal input channel 3.
31	28	PA12	I/O/A	SCS /PWM4 /AIN2	PA12: General purpose bidirectional digital I/0 pin. SCS: Chip select input in SPI0 slave mode, active low. PWM4: Pulse width modulation output channel 4. AIN2: ADC analog signal input channel 2.
32	1	PA11	I/O/A	X32KO /TMR2	PA11: General purpose bidirectional digital I/0 pin. X32KO: Inverted output of low frequency oscillator, connected to one end of eaternal 32KHz crystal. TMR2: Capture input 2 and PWM output channel 2 of timer 2.
1	2	PA10	I/O/A	X32KI /TMR1	PA10: General purpose bidirectional digital I/0 pin. X32KI: Input of low frequency oscillator, connected to the other end of external 32KHz crystal. TMR1: Capture input 1 and PWM output channel 1 of timer 1.
2	none	PB6	I/O/A	RTS /PWM8 /AIN9	PB6: General purpose bidirectional digital I/0 pin. RTS: MODEM output signal of UART0, request to send. PWM8: Pulse width modulation output channel 8. AIN9: ADC analog signal input channel 9.
3	none	PB0	I/O/A	PWM6 /CTS /AIN8	PB0: General purpose bidirectional digital I/0 pin. PWM6: Pulse width modulation output channel 6. CTS: MODEM input signal of UART0; clear to send. AIN8: ADC analog signal input channel 8.

Note:

(1) Pin Type:

I=TTL/CMOS level Schmitt input;
O=CMOS level 3-state output;
A=Analog signal input or output;
5VT=Support 5V signal voltage input.

(2) The alternate functions and mapping of pins are arranged in the table based on their priorities from high to low, and the GPIO function has the lowest priority.

(3) 2-wire simulation debugging interface is configured by ISP tool. After the simulation debugging interface is enabled, PB15 and PB14 are only used as TCK and TIO, and will not be used as GPIO or peripheral alternate function pins. After the simulation debugging interface is disabled, PB15 and PB14 can be used as GPIO or peripheral alternate function pins.

(4) The USB transceiver is designed fully built-in based on USB2.0. When the PB10 pin and the PB11 pin are used for USB, they cannot be connected to resistors in series.

(5) For the pins of those in other packages such as QFN20, please refer to the description of the pins with the same name in the table.

Chapter 2 System architecture and memory

2.1 System architecture

The following figure shows the system architecture block diagram of CH573. Its core is Qingke RISC-V microprocessor.

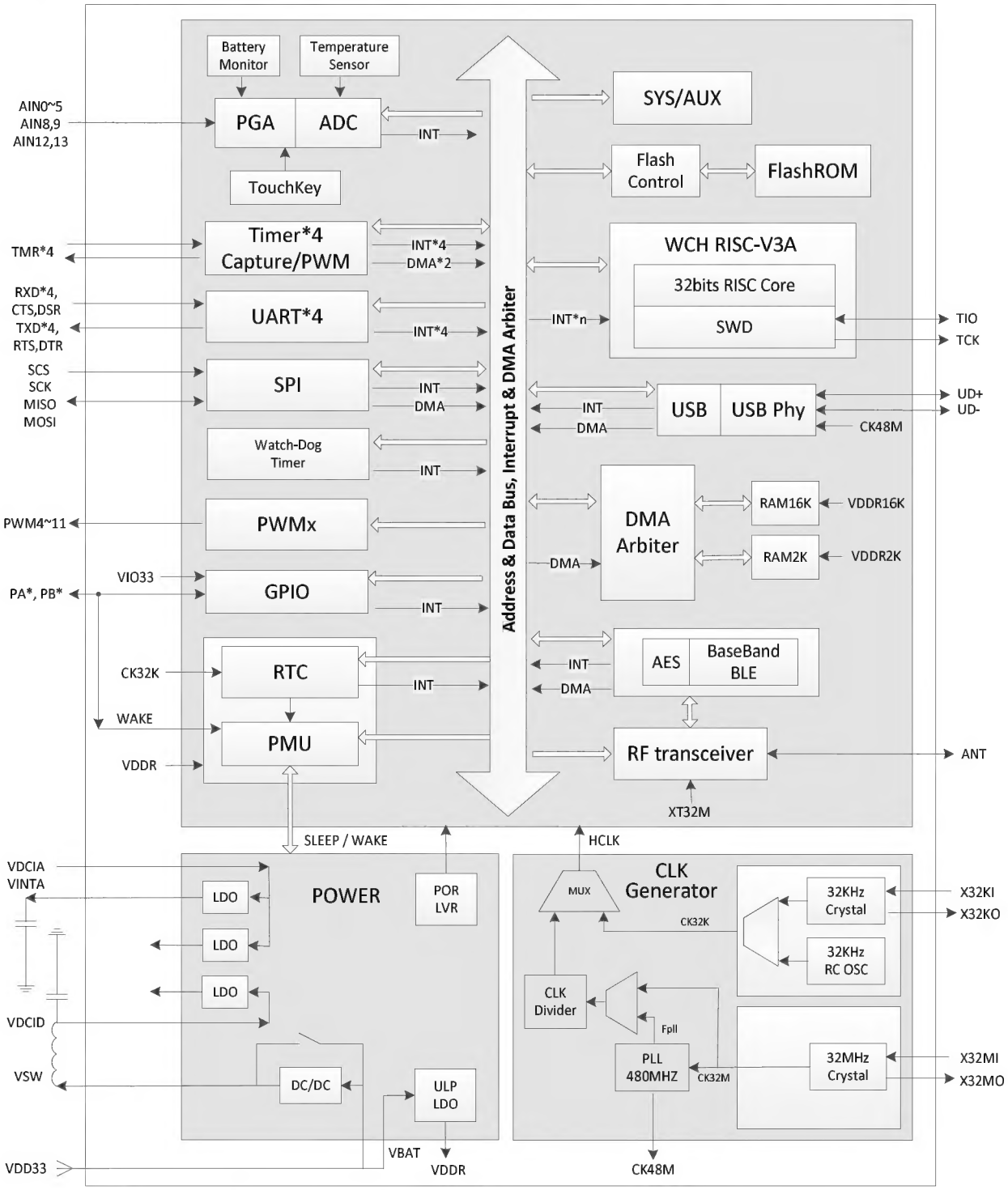

Figure 2-1 CH573 internal architecture block diagram

2.2 Memory mapping

The addressing space of CH573 mainly includes several different areas such as CODE area/FlashROM, DATA area/SRAM and peripherals, as shown in the figure below.

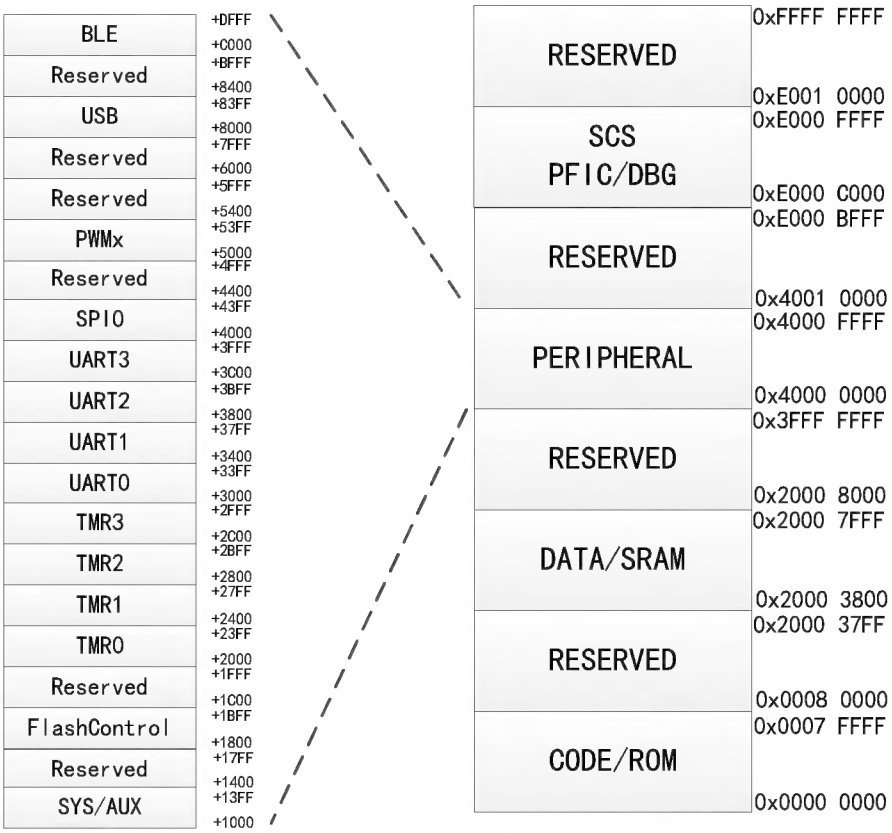

Figure 2-2 Memory mapping

2.3 Memory mapping

The address range of each memory mapping area is shown in the table below:

Table 2-1 Memory Mapping Area Address

Address range	Application	Description
0x00000000-0x0007FFFF	On-chip CODE area, non-volatile memory	512KB, FlashROM
0x00080000-0x200037FF	Reserved	-
0x20003800-0x20007FFF	On-chip DATA area, volatile memory	18KB, SRAM
0x20008000-0x3FFFFFFF	Reserved	-
0x40000000-0x4000FFFF	Various peripherals	Multiple peripheral modules
0x40010000-0xE000BFFF	Reserved	-
0xE000C000-0xE000FFFF	Various peripherals in system	System Control Space (SCS)
0xE0010000-0xFFFFFFFF	Reserved	-

2.3.1 On-chip CODE area mapping table

Table 2-2 CODE area address

Address range	Application	Description
0x00000000-0x0006FFFF	CH573: User application program memory area, CodeFlash	448KB

0x00000000-0x0002FFFF	CH571: User application program memory area, CodeFlash	192KB
0x00070000-0x00077FFF	User non-volatile data memory area, DataFlash	32KB
0x00078000-0x0007DFFF	System bootloader memory area, BootLoader	24KB
0x0007E000-0x0007FFFF	System non-volatile configuration information memory area, InfoFlash	8KB

The configuration information of the addresses 0x0007E000-0x0007EEFF can be set by the user through tools.

Table 2-3 Description of User-level Non-volatile Configuration Information

Bit address	Name	Application	Default Value
Bit 2 - bit 0	RESERVED	Reserved	101b
Bit 3	CFG_RESET_EN	RST# external manual reset input pin enable	0
Bit 4	CFG_DEBUG_EN	Two-wire simulation debugging interface SWD enable	1
Bit 5	RESERVED	Reserved	0
Bit 6	CFG_BOOT_EN	System BootLoader enable	1
Bit 7	CFG_ROM_READ	Code and data protection mode in FlashROM: 0- Forbid the programmer to read out, and keep the program secret; 1- Read enable	1
Bit 27 - bit 8	RESERVED	Reserved	0FFF0Fh
Bit 31 - bit 28	VALID_SIG	Configuration information valid flag, fixed value	0100b

Note: When CFG_DEBUG_EN=1, CFG_RESET_EN=0 and CFG_ROM_READ=1, 2-wire simulation debugging interface is enabled.

2.3.2 On-chip DATA area mapping table

Table 2-4 DATA area address

Address range	Application	Description
0x20003800-0x200077FF	Independently maintainable memory area supplied by the main + auxiliary dual power, RAM16K	16KB
0x20007800-0x20007FFF	Independently maintainable memory area supplied by the main + auxiliary dual power, RAM2K	2KB

2.3.3 Peripheral address assignment

CH573 mainly contains the following peripherals below. Each peripheral occupies a certain address space, and the actual access address of peripheral register is: base address + offset address. In the following chapters, the address of the register is described in detail. The following table shows the assignment of base address of each peripheral.

Table 2-5 Peripheral base address assignment

Peripheral number	Peripheral name	Peripheral base address
1	SYS (PMU/RTC/GPIO, etc.) AUX (ADC/TKEY/PLL, etc.)	0x4000 1000
2	FlashROM-Control	0x4000 1800
3	TMR0	0x4000 2000
4	TMR1	0x4000 2400
5	TMR2	0x4000 2800

6	TMR3	0x4000 2C00
7	UART0	0x4000 3000
8	UART1	0x4000 3400
9	UART2	0x4000 3800
10	UART3	0x4000 3C00
11	SPI0	0x4000 4000
12	PWMx (PWM4～PWM11)	0x4000 5000
13	USB	0x4000 8000
14	Radio:BLE	0x4000 C000 0x4000 D000

The following table is the explanation of "Access" in the register description in the subsequent chapters:

Table 2-6 Description of access attributes

Abbreviation	Description
RF	Software can only read this bit. The read value is fixed, not affected by reset.
RO	Software can only read these bits.
WO	Software can only write to this bit. The read value is 0, or invalid.
RZ	Software can only read this bit. Reading this bit automatically clears it to ‘0’.
WZ	Software can clear this bit by writing.
RW	Software can read and write to these bits.
RW1	Software can read as well as clear this bit by writing 1.
WA	Software can only write, only in safe mode. The read value is 0, or invalid.
RWA	Software can read this bit, and can only write to this bit in safe mode.

The following table explains the abbreviations used in subsequent chapters:

Table 2-7 Description of noun abbreviations

Abbreviation	Description
HSE	External high-frequency crystal oscillator clock source (32MHz recommended)
LSE	External low-frequency crystal oscillator clock source (32KHz recommended)
LSI	Internal low-frequency RC clock oscillator source (32KHz after calibration when the application software is running)
CK32M	High-frequency clock source (32MHz by default)
CK32K	Low-frequency clock source (32KHz by default)
Fpll	PLL output clock (480MHz by default)
HCLK	System clock
Fsys	System clock frequency
Tsys	System clock cycle (1/Fsys)
RAM2K	2KB SRAM of high address
RAM16K	16KB SRAM of low address
0x	The data starting with it indicates a hexadecimal number
H	The data ending with it indicates a hexadecimal number
B	The data ending with it indicates a binary number

Chapter 3 Interrupt

The system has a built-in programmable fast interrupt controller (PFIC), which supports up to 255 interrupt vectors. The current system manages 18 peripheral interrupt channels and 5 core interrupt channels, and other interrupt sources are reserved.

3.1 Interrupt controller

18 peripheral interrupts; each interrupt request has an independent trigger and maskable control bit, as well as a dedicated status bit.

1 non-maskable interrupt NMI.

Unique fast interrupt entry and exit mechanism, hardware automatic stacking and recovery, without instruction overhead.

Unique fast interrupt response mechanism, 4 channels programmable directly access interrupt vector addresses.

3.2 System timer (SysTick)

The core provides a 64-bit decremental counter (SysTick), supports HCLK or HCLK/8 as the time base, with higher priority, and can be used as a time reference after calibration.

3.3 Interrupt and exception vector

The following is the vector table.

Table 3-1 Interrupt vector table

No.	Priority	Priority type	Name	Description	Address
0	-	-	-	Reserved	0x0000_0000
1	-3	Fixed	Reset	Reset	0x0000_0004
2	-2	Fixed	NMI	Non-maskable interrupt	0x0000_0008
3	-1	Fixed	EXC	Failures and exception interrupts of all types	0x0000_000C
4-11	-	-	-	Reserved	-
12	0	Settable	SysTick	SysTick timer	0x0000_0030
13	-	-	-	Reserved	-
14	1	Settable	SWI	Software interrupt	0x0000_0038
15	-	-	-	Reserved	0x0000_003C
16	2	Settable	TMR0	TMR0 interrupt	0x0000_0040
17	3	Settable	GPIO_A	GPIO port PA interrupt	0x0000_0044
18	4	Settable	GPIO_B	GPIO port PB interrupt	0x0000_0048
19	5	Settable	SPI0	SPI0 interrupt	0x0000_004C
20	6	Settable	BLEL	LLE interrupt of wireless module	0x0000_0050
21	7	Settable	BLEB	BB interrupt of wireless module	0x0000_0054
22	8	Settable	USB	USB interrupt	0x0000_0058
23	-	Settable	-	Reserved	-
24	10	Settable	TMR1	TMR1 interrupt	0x0000_0060
25	11	Settable	TMR2	TMR2 interrupt	0x0000_0064

26	12	Settable	UART0	UART0 interrupt	0x0000_0068
27	13	Settable	UART1	UART1 interrupt	0x0000_006C
28	14	Settable	RTC	RTC interrupt	0x0000_0070
29	15	Settable	ADC	ADC and TouchKey interrupt	0x0000_0074
30	-	Settable	-	Reserved	-
31	17	Settable	PWMX	PWMX (PWM4-11) interrupt	0x0000_007C
32	18	Settable	TMR3	TMR3 interrupt	0x0000_0080
33	19	Settable	UART2	UART2 interrupt	0x0000_0084
34	20	Settable	UART3	UART3 interrupt	0x0000_0088
35	21	Settable	WDOG_BAT	Watchdog timer interrupt/battery low voltage interrupt	0x0000_008C

3.4 Register

3.4.1 PFIC register description

PFIC register base address: 0xE000E000

Table 3-2 PFIC registers

Name	Offset address	Description	Reset value
R32_PFIC_ISR1	0x00	PFIC interrupt enable status register 1	0x00000000
R32_PFIC_ISR2	0x04	PFIC interrupt enable status register 2	0x00000000
R32_PFIC_IPR1	0x20	PFIC interrupt suspension status register 1	0x00000000
R32_PFIC_IPR2	0x24	PFIC interrupt suspension status register 2	0x00000000
R32_PFIC_ITHRESDR	0x40	PFIC interrupt priority threshold configuration register	0x00000000
R32_PFIC_FIBADDRR	0x44	PFIC fast interrupt service base address register	0x00000000
R32_PFIC_CFGR	0x48	PFIC interrupt configuration register	0x00000000
R32_PFIC_GISR	0x4C	PFIC interrupt global status register	0x00000000
R32_PFIC_FIOFADDRR0	0x60	PFIC fast interrupt 0 offset address register	0x00000000
R32_PFIC_FIOFADDRR1	0x64	PFIC fast interrupt 1 offset address register	0x00000000
R32_PFIC_FIOFADDRR2	0x68	PFIC fast interrupt 2 offset address register	0x00000000
R32_PFIC_FIOFADDRR3	0x6C	PFIC fast interrupt 3 offset address register	0x00000000
R32_PFIC_IENR1	0x100	PFIC interrupt enable setting register 1	0x00000000
R32_PFIC_IENR2	0x104	PFIC interrupt enable setting register 2	0x00000000
R32_PFIC_IRER1	0x180	PFIC interrupt enable clearing register 1	0x00000000
R32_PFIC_IRER2	0x184	PFIC interrupt enable clearing register 2	0x00000000
R32_PFIC_IPSR1	0x200	PFIC interrupt suspension setting register 1	0x00000000
R32_PFIC_IPSR2	0x204	PFIC interrupt suspension setting register 2	0x00000000
R32_PFIC_IPRR1	0x280	PFIC interrupt suspension clearing register 1	0x00000000
R32_PFIC_IPRR2	0x284	PFIC interrupt suspension clearing register 2	0x00000000
R32_PFIC_IACTR1	0x300	PFIC interrupt activation status register 1	0x00000000
R32_PFIC_IACTR2	0x304	PFIC interrupt activation status register 2	0x00000000
R32_PFIC_IPRIORx	0x400	PFIC interrupt priority configuration register	0x00000000
R32_PFIC_SCTLR	0xD10	PFIC system control register	0x00000000
R32_PFIC_VTCTLR	0xD14	PFIC vector table control register	0x00000000

PFIC interrupt enable status register 1 (PFIC_ISR1)

Bit	Name	Access	Description	Reset value
[31:12]	INTENSTA	RO	31# and below interrupts current enable status. 1: Enable the current number interrupt; 0: Disable the current number interrupt.	0
[11:0]	Reserved	RO	Reserved. Reset, NMI and EXC interrupts are ignored, the same below.	0

PFIC interrupt enable status register 2 (PFIC_ISR2)

Bit	Name	Access	Description	Reset value
[31:4]	Reserved	RO	Reserved.	0
[3:0]	INTENSTA	RO	32# and above interrupts current enable status. 1: Enable the current number interrupt; 0: Disable the current number interrupt.	0

PFIC interrupt suspension status register 1 (PFIC_IPR1)

Bit	Name	Access	Description	Reset value
[31:12]	PENDSTA	RO	31# and below interrupts current suspension status. 1: Current number interrupt has been suspended; 0: Current number interrupt is not suspended;	0
[11:0]	Reserved	RO	Reserved.	0

PFIC interrupt suspension status register 2 (PFIC_IPR2)

Bit	Name	Access	Description	Reset value
[31:4]	Reserved	RO	Reserved.	0
[3:0]	PENDSTA	RO	32# and above interrupts current suspension status. 1: Current number interrupt has been suspended; 0: Current number interrupt is not suspended;	0

PFIC interrupt priority threshold configuration register (PFIC_ITHRESDR)

Bit	Name	Access	Description	Reset value
[31:8]	Reserved	RO	Reserved.	0
[7:0]	THRESHOLD	RW	Interrupt priority threshold setting value. If the interrupt priority value is lower than the current setting value, interrupt service will not be performed when suspended. When this register is 0, the threshold register function is invalid. [7:4]: Priority threshold. [3:0]: Reserved; 0 constantly; invalid if writing.	0

PFIC fast interrupt service base address register (PFIC_FIBADDRR)

Bit	Name	Access	Description	Reset value
[31:28]	BASEADDR	RW	The high 4 bits of target jump address of fast interrupt response. Together with PFIC_FIOFADDRR*, it forms the corresponding-number fast interrupt vector (the 32-bit jump address of the interrupt service program).	0
[27:0]	Reserved	RO	Reserved.	0

PFIC interrupt configuration register (PFIC_CFGR)

Bit	Name	Access	Description	Reset value
[31:16]	KEYCODE	WO	For different target control bits, the corresponding security access identification data needs to be written synchronously for modification, and the read value is fixed to 0: KEY1 = 0xFA05; KEY2 = 0xBCAF; KEY3 = 0xBEEF.	0
[15:8]	Reserved	RO	Reserved.	0
7	SYSRESET	WO	System reset (Write into KEY3 synchronously). Cleared to 0 automatically. Valid when writing 1; invalid when writing 0.	0
6	PFICRESET	WO	PFIC control module reset; cleared to 0 automatically. Valid when writing 1; invalid when writing 0.	0
5	EXCRESET	WO	Exception interrupt clearing suspension (write into KEY2 synchronously). Valid when writing 1; invalid when writing 0.	0
4	EXCSET	WO	Exception interrupt suspension (write into KEY2 synchronously). Valid when writing 1; invalid when writing 0.	0
3	NMIRESET	WO	NMI interrupt clearing suspension (write into KEY2 synchronously). Valid when writing 1; invalid when writing 0.	0
2	NMISET	WO	NMI interrupt suspension (write into KEY2 synchronously). Valid when writing 1; invalid when writing 0.	0
1	NESTCTRL	RW	Nesting interrupt enable control: 1: Off; 0: On (write into KEY1 synchronously).	0
0	HWSTKCTRL	RW	Hardware stack enable control: 1: Off; 0: On (write into KEY1 synchronously).	0

PFIC interrupt global status register (PFIC_GISR)

Bit	Name	Access	Description	Reset value
[31:10]	Reserved	RO	Reserved.	0

9	GPENDSTA	RO	Whether there is interrupt suspended currently: 1: Yes; 0: No.	0
8	GACTSTA	RO	Whether the interrupt is executed currently: 1: Yes; 0: No.	0
[7:0]	NESTSTA	RO	Current interrupt nesting status, support 2-level nesting currently, [1:0] valid. 3: Level 2 interrupt in process; 1: Level 1 interrupt in process; 0: No interrupt occurs; Others: Impossible condition.	0

PFIC fast interrupt 0 offset address register (PFIC_FIOFADDRR0)

Bit	Name	Access	Description	Reset value
[31:24]	IRQID0	RW	Number of fast interrupt 0.	0
[23:0]	OFFADDR0	RW	Lowr 24-bit address of the fast interrupt 0 service program, of which the low 20-bit configuration is valid, and bits [23:20] are fixed to 0.	0

PFIC fast interrupt 1 offset address register (PFIC_FIOFADDRR1)

Bit	Name	Access	Description	Reset value
[31:24]	IRQID1	RW	Number of fast interrupt 1.	0
[23:0]	OFFADDR1	RW	Lower 24-bit address of the fast interrupt 1 service program, of which the low 20-bit configuration is valid, and bits [23:20] are fixed to 0.	0

PFIC fast interrupt 2 offset address register (PFIC_FIOFADDRR2)

Bit	Name	Access	Description	Reset value
[31:24]	IRQID2	RW	Number of fast interrupt 2.	0
[23:0]	OFFADDR2	RW	Lower 24-bit address of the fast interrupt 2 service program, of which the low 20-bit configuration is valid, and bits [23:20] are fixed to 0.	0

PFIC fast interrupt 3 offset address register (PFIC_FIOFADDRR0)

Bit	Name	Access	Description	Reset value
[31:24]	IRQID3	RW	Number of fast interrupt 3.	0
[23:0]	OFFADDR3	RW	Lower 24-bit address of the fast interrupt 3 service program, of which the low 20-bit configuration is valid, and bits [23:20] are fixed to 0.	0

PFIC interrupt enable setting register 1 (PFIC_IENR1)

Bit	Name	Access	Description	Reset value
[31:12]	INTEN	WO	31# and below interrupts enable control. 1: Enable the current number interrupt;	0

			0: No effect.	
[11:0]	Reserved	RO	Reserved.	0

Note: It is recommended to call the subroutine and macro in the EVT profile to operate on PFIC_IENR1/2, avoiding writing the register directly, the same below.

PFIC interrupt enable setting register 2 (PFIC_IENR2)

Bit	Name	Access	Description	Reset value
[31:4]	Reserved	RO	Reserved.	0
[3:0]	INTEN	RW1	32# and above interrupts enable control. 1: Enable the current number interrupt; 0: No effect.	0

PFIC interrupt enable clearing register 1 (PFIC_IRER1)

Bit	Name	Access	Description	Reset value
[31:12]	INTRESET	WO	31# and below interrupts disable control. 1: Disable the current number interrupt; 0: No effect.	0
[11:0]	Reserved	RO	Reserved.	0

Note: It is recommended to call the subroutine and macro in the EVT profile to operate on PFIC_IRER1/2, avoiding writing the register directly, the same below.

PFIC interrupt enable clearing register 2 (PFIC_IRER2)

Bit	Name	Access	Description	Reset value
[31:4]	Reserved	RO	Reserved.	0
[3:0]	INTRESET	WO	32# and above interrupts disable control. 1: Disable the current number interrupt; 0: No effect.	0

PFIC interrupt suspension setting register 1 (PFIC_IPSR1)

Bit	Name	Access	Description	Reset value
[31:12]	PENDSET	WO	31# and below interrupts suspension setting. 1: Current number interrupt is suspended; 0: No effect.	0
[11:0]	Reserved	RO	Reserved.	0

PFIC interrupt suspension setting register 2 (PFIC_IPSR2)

Bit	Name	Access	Description	Reset value
[31:4]	Reserved	RO	Reserved.	0
[3:0]	PENDSET	WO	32# and above interrupts suspension setting. 1: Current number interrupt is suspended; 0: No effect.	0

PFIC interrupt suspension clearing register 1 (PFIC_IPRR1)

Bit	Name	Access	Description	Reset value
[31:12]	PENDRESET	WO	31# and below interrupts suspension clearing. 1: Current number interrupt clearing suspension status; 0: No effect.	0
[11:0]	Reserved	RO	Reserved.	0

PFIC interrupt suspension clearing register 2 (PFIC_IPRR2)

Bit	Name	Access	Description	Reset value
[31:4]	Reserved	RO	Reserved.	0
[3:0]	PENDRESET	WO	32# and above interrupts suspension clearing. 1: Current number interrupt clearing suspension status; 0: No effect.	0

PFIC interrupt activation status register 1 (PFIC_IACTR1)

Bit	Name	Access	Description	Reset value
[31:12]	IACTS	RW1	31# and below interrupts execution status. 1: Executing the current number interrupt; 0: The current number interrupt is not executed.	0
[11:0]	Reserved	RO	Reserved.	0

PFIC interrupt activation status register 2 (PFIC_IACTR2)

Bit	Name	Access	Description	Reset value
[31:4]	Reserved	RO	Reserved.	0
[3:0]	IACTS	RW1	32# and above interrupts execution status. 1: Executing the current number interrupt; 0: The current number interrupt is not executed.	0

PFIC interrupt priority configuration register (PFIC_IPRIORx) (x=0-63)

The controller supports 256 interrupts (0-255), and 8 bits are used to set the control priority for each interrupt.

	31 24	23 16	15 8	7 0
IPRIOR63	PRIO_255	PRIO_254	PRIO_253	PRIO_252
…	…	…	…	…
IPRIORx	PRIO_(4x+3)	PRIO_(4x+2)	PRIO_(4x+1)	PRIO_(4x)
…	…	…	…	…
IPRIOR0	PRIO_3	PRIO_2	PRIO_1	PRIO_0

Bit	Name	Access	Description	Reset value
[2047:2040]	IP_255	RW	Same as IP_0.	0
…	…	…	…	…
[31:24]	IP_3	RW	Same as IP_0.	0
[23:16]	IP_2	RW	Same as IP_0.	0
[15:8]	IP_1	RW	Same as IP_0.	0
[7:0]	IP_0	RW	Number 0 interrupt priority configuration: [7:4]: Priority control bit. [3:0]: Reserved; 0 constantly; invalid if writing. The smaller priority value means higher priority. There is 2-level interrupt nesting, i.e., it can be only seized once.	0

PFIC system control register (PFIC_SCTLR)

Bit	Name	Access	Description	Reset value
[31:6]	Reserved	RO	Reserved.	0
5	SETEVENT	WO	Set event to wake up the WFE.	0
4	SEVONPEND	RW	When an event or interrupt suspending status occurs, the system can be woken up by the WFE command. If the WFE command is not executed, the system will be woken up immediately after the next execution of the command. 1: Enable events and all interrupts (including disabled interrupts) can wake up the system; 0: Only enabled events and enabled interrupts can wake up the system.	0
3	WFITOWFE	RW	The WFI command is executed as WFE. 1: The subsequent WFI command is deemed as WFE command; 0: No action.	0
2	SLEEPDEEP	RW	Low power consumption mode of control system: 1: deepsleep 0: sleep	0
1	SLEEPONEXIT	RW	The system status after controlled to exit the interrupt service program: 1: The system gets into low power consumption mode; 0: The system gets into the main program.	0
0	Reserved	RO	Reserved.	0

PFIC system control register (R32_PFIC_VTCTLR)

Bit	Name	Access	Description	Reset value
[31:6]	Reserved	RO	Reserved.	0
0	VTADDR	RO	Write 1 to offset the vector table address to 0x20003800.	0

3.4.2 SysTick register description

STK register base address: 0xE000F000

Table 3-3 STK registers

Name	Offset address	Description	Reset value
R32_STK_CTLR	0x00	System count control register	0x00000000
R32_STK_CNTL	0x04	System counter low-bit register	0x00000000
R32_STK_CNTH	0x08	System counter high-bit register	0x00000000
R32_STK_CMPLR	0x0C	Count reload low-bit register	0x00000000
R32_STK_CMPHR	0x10	Count reload high-bit register	0x00000000
R32_STK_CNTFG	0x14	Counter count flag register	0x00000000

System count control register (STK_CTLR)

Bit	Name	Access	Description	Reset value
[31:9]	Reserved	RO	Reserved.	0
8	STRELOAD	W1	Reload control, write 1 to update the value of count reloading register (64-bit) to the current counter register.	0
[7:3]	Reserved	RO	Reserved.	0
2	STCLK	RW	Counter clock source selection: 1: Select HCLK as the time base; 0: Select HCLK/8 as the counting time base.	0
1	STIE	RW	Counter interrupt enable control bit: 1: Enable counter interrupt; 0: No counter interrupt;	0
0	STE	RW	System counter enable control bit: 1: Enable system counter STK; 0: Disable system counter STK; the counter stops counting.	0

System counter low bit register (STK_CNTL)

Bit	Name	Access	Description	Reset value
[31:0]	CNTL	RW	Low 32 bits of count value of STK counter. The count is decreasing. When CNT[63:0] value is decreased to 0, the STK interrupt flag is set.	0

System counter high bit register (STK_CNTH)

Bit	Name	Access	Description	Reset value
[31:0]	CNTH	RW	High 32 bits of count value of STK counter. The count is decreasing. When CNT[63:0] value is decreased to 0, the STK interrupt flag is set.	0

Count reload low bit register (STK_CMPLR)

Bit	Name	Access	Description	Reset value
[31:0]	CMPL	RW	Set the reloading counter value lower 32 bits.	0

Count reload higher-bit register (STK_CMPHR)

Bit	Name	Access	Description	Reset value
[31:0]	CMPH	RW	Set the reloading counter value high 32 bits.	0

Counter count flag register (STK_CNTFG)

Bit	Name	Access	Description	Reset value
[31:2]	Reserved	RO	Reserved.	0
1	CNTIF	RW0	Flag that counter is decremented to 0. Cleared by writing 0; invalid when writing 1.	0
0	SWIE	RW	System software interrupt enable bit. 1: Enable software interrupt, and trigger the software interrupt service at the same time; 0: Disable software interrupt.	0

Note: When SWIE=1, the software interrupt service will be executed. If SWIE function is not disabled in the interrupt service, the software interrupt service will be triggered again after exiting the interrupt service.

Chapter 4 System control

4.1 Reset control

The system supports 6 types of resets, including Real Power on Reset (RPOR), external Manual Reset (MR), internal Software Reset (SR), Watch-dog Time-out Reset (WTR), Global Reset by Waking under Shutdown Mode (GRWSM) and Local Reset by Waking (LRW).

The R8_GLOB_RESET_KEEP register and the RB_ROM_CODE_OFS register are reset only when RPOR occurs, and are not affected by other types of resets.

Please refer to the timing parameter table in section 20.5 for the timing parameters and reset property parameters in the figure below.

4.1.1 Real power on reset (RPOR)

When the power is turned on, the POR module inside the chip will generate a power-on reset and delay to wait for the power to stabilize. In addition, during operation, when the power voltage is lower than Vlvr, the internal LVR module of the chip will generate a low voltage reset until the voltage rises, and delay to wait for the power to stabilize. The figure below shows the power-on reset process and the low-voltage reset process.

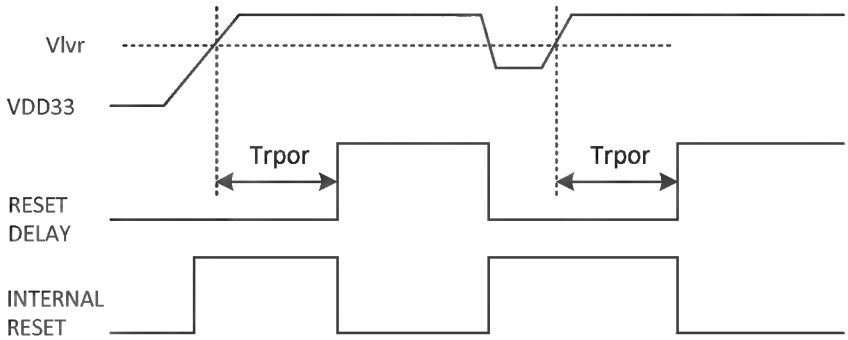

Figure 4-1 Real power on reset

4.1.2 External manual reset (MR)

The external manual reset is triggered by a low level externally added to the RST# pin. When the duration of reset low level is greater than the minimum reset pulse width (Trst), the system is triggered to reset.

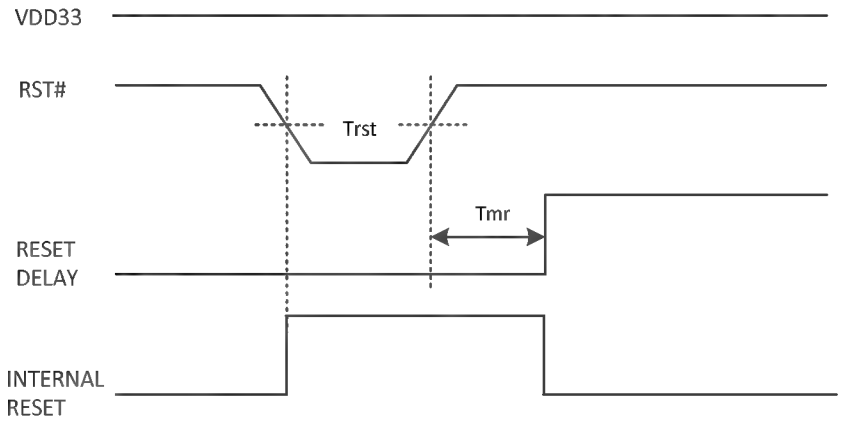

Figure 4-2 External manual reset

4.1.3 Internal software reset (SR)

Internal software reset is automatically carried out without external intervention. Set the bit RB_SOFTWARE_RESET of global reset configuration register (R8_RST_WDOG_CTRL) to 1, to realize software reset. This bit will be automatically cleared to 0.

4.1.4 Watchdog timeout reset (WTR)

Watchdog function is based on an 8-bit count-up counter with a count clock cycle of 131072/Fsys. When the watchdog timeout reset function is turned on, the entire system will be reset once this counter overflows.

4.1.5 Global reset by waking under Shutdown mode (GRWSM)

Once the system enters shutdown mode (see the power management chapter for details), the system will perform the wake-up operation in an orderly manner under the action of the wake-up signal, and the system will perform a global reset after wake-up. This reset effect is similar to that of power-on reset.

4.1.6 Local reset by waking (LRW)

If the system is awakened from sleep mode, a reset will be generated after the associated power is ready. It is a partial reset, with a selective reset of the registers that are powered down in sleep mode as needed.

In sleep mode, the registers of each functional module are divided into 3 categories:

The first type is the key registers belonging to the functional module that requires data retention (such as configuration/mode, etc.). At the time of sleep, the auxiliary power continues to supply power, and the data is not lost, both sleep and wake-up have no effect on data;

The second type is the regenerative registers belonging to the functional module that requires data retention (such as counters, FIFOs, etc.). The power is turned off during sleep, and the data is a random number (such as FIFO memory cell) or reset (such as FIFO counter) after waking up;

The third type is the registers belonging to the functional module that does not require data retention. The power is turned off during sleep, and the data is a random number (such as FIFO memory cell) or reset (such as FIFO counter, configuration/mode register) after waking up.

LRW is used for the latter 2 reset registers above.

4.2 Safe access

The attributes of some registers of the system are "RWA" or "WA", indicating that the current register can be safely accessed and can be read directly, but needs to enter the safe access mode when write-in:

First write 0x57 into the R8_SAFE_ACCESS_SIG register;

Then write 0xA8 into the R8_SAFE_ACCESS_SIG register;

At this time, you can enter the safe access mode and operate the registers with the attribute "RWA/WA". After that, about 16 system frequency cycles (Tsys) are in safe mode, and one or more secure registers can be rewritten within the valid period. The safe mode will be automatically terminated after the above validity period is exceeded. Or you can write 0x00 into the R8_SAFE_ACCESS_SIG register in advance to terminate the safe mode.

4.3 Register description

Table 4-1 System control registers

Name	Access address	Description	Reset value
R8_SAFE_ACCESS_SIG	0x40001040	Security access flag register	0x00
R8_CHIP_ID	0x40001041	Chip ID register	0x73
R8_SAFE_ACCESS_ID	0x40001042	Safe access ID register	0x04
R8_WDOG_COUNT	0x40001043	Watchdog counter register	0x00
R8_RESET_STATUS	0x40001044	Reset status register	0x01
R8_GLOB_ROM_CFG	0x40001044	FlashROM application configuration register	0x01
R8_GLOB_CFG_INFO	0x40001045	Global configuration information status register	0xEX
R8_RST_WDOG_CTRL	0x40001046	Watchdog and reset configuration register	0x00
R8_GLOB_RESET_KEEP	0x40001047	Reset hold register	0x00
R32_FLASH_DATA	0x40001800	FlashROM word data register	0xXXXXXXXX
R32_FLASH_CONTROL	0x40001804	FlashROM control register	0x074000XX
R8_FLASH_DATA	0x40001804	FlashROM byte data register	0xXX
R8_FLASH_CTRL	0x40001806	FlashROM access control register	0x40
R8_FLASH_CFG	0x40001807	FlashROM access configuration register	0x07

Safe access flag register (R8_SAFE_ACCESS_SIG)

Bit	Name	Access	Description	Reset value
[7:0]	R8_SAFE_ACCESS_SIG	WO	Safe access flag register. Some registers (access attribute is RWA) are protection registers and write operation can be conducted only after entering the safe access mode. Write 0x57 first and then 0xA8 to this register, to enter the safe access mode. The time is limited to about 16 main clock cycles (Tsys), and automatic protection is enabled if it is exceeded. You can write any other value to force direct exit from the safe access mode and return to the protected state.	00h
7	Reserved	RO	Reserved.	0
[6:4]	RB_SAFE_ACC_TIMER	RO	Count the current safe access time.	000b
3	RB_SAFE_ACC_ACT	RO	Current safe access mode status: 1: Writable in unlocked/safe access mode; 0: Locked, RWA attribute register cannot be rewritten.	0
2	Reserved	RO	Reserved.	0
[1:0]	RB_SAFE_ACC_MODE	RO	Current safe access mode status: 11: Safe mode, attribute RWA register can be written; Other: Non-safe mode.	00b

Chip ID register (R8_CHIP_ID)

Bit	Name	Access	Description	Reset value
[7:0]	R8_CHIP_ID	RF	CH573: A fixed value of 73h is used to identify the chip. CH571: A fixed value of 71h is used to identify the chip.	73h 71h

Safe access ID register (R8_SAFE_ACCESS_ID)

Bit	Name	Access	Description	Reset value
[7:0]	R8_SAFE_ACCESS_ID	RF	A fixed value of 04h.	04h

Watchdog counter register (R8_WDOG_COUNT)

Bit	Name	Access	Description	Reset value
[7:0]	R8_WDOG_COUNT	RW	The watchdog counter, whose initial value can be preset, is automatically incremented, and can be cycled from 0xFF to 0x00 and then continue. Count cycle = 131072/Fsys.	00h

Reset status register (R8_RESET_STATUS), FlashROM application configuration register (R8_GLOB_ROM_CFG)

Bit	Name	Access	Description	Reset value
7	RB_ROM_CODE_WE	RWA	Erase/program enable bit of CodeFlash in FlashROM program memory area: 1: Erase/program is enabled; 0: Erase/program protection for this area.	0
6	RB_ROM_DATA_WE	RWA	Erase/program enable bit of DataFlash in FlashROM data memory area: 1: Erase/program is enabled; 0: Erase/program protection for all.	0
5	RB_ROM_CTRL_EN	RWA	FlashROM access control interface enable: 1: Control enabled; 0: Access disabled.	0
4	RB_ROM_CODE_OFS	RWA	Select the start offset address of user program code in FlashROM. This value is not affected by MR, SR, WTR or GRWSM, and can be cleared only when RPOR is valid: 0: 0x000000; 1: 0x040000 (skip the first 256KB in ROM).	0
3	Reserved	RO	Reserved.	0
[2:0]	RB_RESET_FLAG	RO	Last reset state: 000: Software reset SR (generated when RB_WDOG_RST_EN=0 and software reset, otherwise, it can be reset but this status is not generated);	001b

			001: Real Power-on reset (RPOR); 010: Watchdog timeout reset (WTR); 011: External manual reset (MR); 101: Global Reset by Waking under Shutdown Mode (GRWSM) 100/110/111: Local Reset by waking (LRW), and the lasts reset is SR/WTR/MR.	

Global configuration information status register (R8_GLOB_CFG_INFO)

Bit	Name	Access	Description	Reset value
[7:6]	Reserved	RO	Reserved.	11b
5	RB_BOOT_LOADER	RO	Bootloader status: 1: Currently in Bootloader status; 0: Currently in application program status.	1/0
4	RB_CFG_DEBUG_EN	RO	Two-wire simulation debugging interface SWD enable status: 1: Enable simulation and debugging, and FlashROM can be read; 0: Disable simulation and debugging.	0
3	RB_CFG_BOOT_EN	RO	System BootLoader enable status: 1: Enable; 0: Disable.	1
2	RB_CFG_RESET_EN	RO	RST# external manual reset input enable status: 1: Enable; 0: Disable.	0
1	Reserved	RO	Reserved.	0
0	RB_CFG_ROM_READ	RO	Code and data area protection status in FlashROM: 1: External programmer is readable; 0: Protected, externally inaccessible, and the program is kept secret.	0

Watchdog and reset configuration register (R8_RST_WDOG_CTRL)

Bit	Name	Access	Description	Reset value
[7:5]	Reserved	RO	Reserved.	000b
4	RB_WDOG_INT_FLAG	RW1	Watchdog timer interrupt flag: 1: Watchdog count overflows, that is, R8_WDOG_COUNT is detected to progressively increase from 0xFF to 0x00; 0: Watchdog count has not overflowed. Write 1 to clear, or reload the watchdog counter value (R8_WDOG_COUNT) to clear, or execute __SEV() to clear.	0
3	Reserved	RO	Reserved.	0
2	RB_WDOG_INT_EN	RWA	Watchdog timer interrupt enable bit: 1: Enable, an interrupt will be generated after	0

			the watchdog count overflows; 0: Disable the watchdog timer interrupt.	
1	RB_WDOG_RST_EN	RWA	Watchdog timeout reset enable bit: 1: Enable, system is reset after the watchdog count overflows; 0: Only used as watchdog timer. Note: After this bit is set to 1, the software reset operation will not affect the RB_RESET_FLAG status.	0
0	RB_SOFTWARE_RESET	WA/ WZ	System software reset control; automatically cleared after reset: 1: Perform system software reset; 0: Idle, no action.	0

Reset keep register (R8_GLOB_RESET_KEEP)

Bit	Name	Access	Description	Reset value
[7:0]	R8_GLOB_RESET_KEEP	RW	Reset keep register. The value of this register is not affected by manual reset, software reset, watchdog reset or ordinary wake-up reset.	00h

For the operation or setting of FlashROM, please refer to related subprograms. This datasheet does not provide the instructions on FlashROM word data registers and FlashROM control registers.

4.4 Flash-ROM operation steps

1. Erase Flash-ROM and change all data bits in the target sector to 1. Please refer to and call related subprograms.
2. Write Flash-ROM, change some data bits in the target word from 1 to 0 (the bit data cannot be changed from 0 to 1), please refer to and call the related subprograms.
3. Read Flash-ROM, read the code or data of the target address through the pointer to the program memory space.

4.5 Unique ID

Each chip has a unique ID number when it is delivered from the factory, namely the chip identification number. The ID data and its checksum are 8 bytes in total, stored in the read-only area of chip. Please refer to the example programs for details.

Chapter 5 Power control

5.1 Power management

CH573 has a built-in Power Management Unit (PMU). The system power is input from VDD33 to provide the FlashROM, digital circuits (including core, USB, etc.) and analog circuits (including high-frequency oscillator, PLL, ADC and RF transceiver) of system with the required power through the built-in multiple LDO voltage regulators. The power of GPIO and FlashROM is input from VIO33.

There are 2 types of power supply during normal work: direct power and DC-DC conversion. In addition to normal operation, CH573 provides 4 low power consumption modes: idle mode, suspend mode, sleep mode and power-off mode.

DC-DC is not enabled by default after power-on, but direct power is provided, with a small voltage ripple. In order to reduce the system power consumption during normal operation, you can choose to enable DC-DC to increase the power consumption utilization rate, and the operating current will usually drop to about 60% of when direct power is used.

In order to reduce the power consumption of the system during sleep, you can choose to turn off the main LDO of the system and switch to the built-in ultra-low power ULP-LDO of the system to provide the auxiliary power. When the system gets into sleep or power-down mode, in addition to power management and RTC registers and other normal power units, you can select whether to maintain the power supply of the high 2KB and 16KB SRAM, core and all peripherals of system, and whether to enable LSE/LSI.

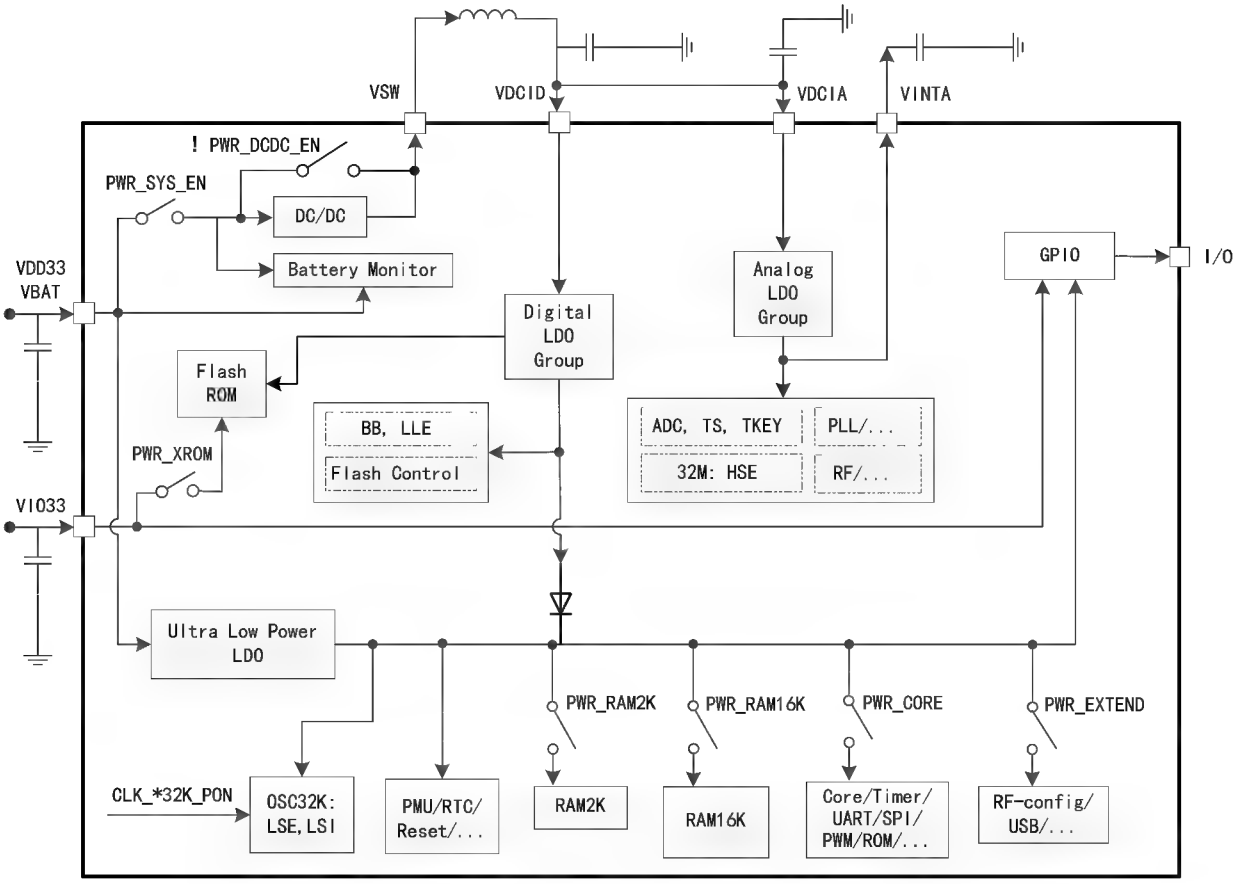

Figure 5-1 Power system

5.2 Register description

Table 5-1 Power management registers

Name	Access address	Description	Reset value
R16_SLP_CLK_OFF	0x4000100C	Sleep clock control register	0x0000
R8_SLP_CLK_OFF0	0x4000100C	Sleep clock control register 0	0x00
R8_SLP_CLK_OFF1	0x4000100D	Sleep clock control register 1	0x00
R8_SLP_WAKE_CTRL	0x4000100E	Wake-up event configuration register	0x20
R8_SLP_POWER_CTRL	0x4000100F	Peripheral sleep power control register	0x00
R16_POWER_PLAN	0x40001020	Sleep power management register	0x11DF
R16_AUX_POWER_ADJ	0x40001022	Auxiliary power adjustment control register	0x0XXX
R8_BAT_DET_CTRL	0x40001024	Battery voltage detection control register	0x00
R8_BAT_DET_CFG	0x40001025	Battery voltage detection configuration register	0x02
R8_BAT_STATUS	0x40001026	Battery status register	0x00

Sleep clock control register 0 (R8_SLP_CLK_OFF0)

Bit	Name	Access	Description	Reset value
7	RB_SLP_CLK_UART3	RWA	Clock source of UART3: 1: Disable; 0: Enable.	0
6	RB_SLP_CLK_UART2	RWA	Clock source of UART2: 1: Disable; 0: Enable.	0
5	RB_SLP_CLK_UART1	RWA	Clock source of UART1: 1: Disable; 0: Enable.	0
4	RB_SLP_CLK_UART0	RWA	Clock source of UART0: 1: Disable; 0: Enable.	0
3	RB_SLP_CLK_TMR3	RWA	Clock source of timer 3: 1: Disable; 0: Enable.	0
2	RB_SLP_CLK_TMR2	RWA	Clock source of timer 2: 1: Disable; 0: Enable.	0
1	RB_SLP_CLK_TMR1	RWA	Clock source of timer 1: 1: Disable; 0: Enable.	0
0	RB_SLP_CLK_TMR0	RWA	Clock source of timer 0: 1: Disable; 0: Enable.	0

Sleep clock control register 1 (R8_SLP_CLK_OFF1)

Bit	Name	Access	Description	Reset value
7	RB_SLP_CLK_BLE	RWA	Clock source of BLE controller: 1: Disable; 0: Enable.	0
6	Reserved	RO	Reserved.	0
5	Reserved	RO	Reserved.	0
4	RB_SLP_CLK_USB	RWA	Clock source of USB controller: 1: Disable; 0: Enable.	0

3	Reserved	RO	Reserved.	0
2	RB_SLP_CLK_PWMX	RWA	PWMx clock source: 1: Disable; 0: Enable.	0
1	Reserved	RO	Reserved.	0
0	RB_SLP_CLK_SPI0	RWA	SPI0 clock source: 1: Disable; 0: Enable.	0

Wake-up event configuration register (R8_SLP_WAKE_CTRL)

Bit	Name	Access	Description	Reset value
7	RB_WAKE_DELAY	RWA	Select the number of delay cycles after wake-up (plus T_{SUHSE}): 1: Short delay, 520 cycles + T_{SUHSE}; 0: Long delay, 3590 cycles + T_{SUHSE}.	0
6	RB_WAKE_EV_MODE	RWA	Wake-up event internal memory mode enable: 1: Enable memory, support short-pulse event wake-up; 0: Disable memory, the event should remain valid until wake up.	0
5	RB_SLP_BAT_WAKE	RWA	Enable battery low voltage event wake up system: 1: Enable; 0: Disable.	1
4	RB_SLP_GPIO_WAKE	RWA	Enable GPIO event wake up system: 1: Enable; 0: Disable.	0
3	RB_SLP_RTC_WAKE	RWA	Enable RTC event wake up system: 1: Enable; 0: Disable.	0
2	Reserved	RO	Reserved.	0
1	Reserved	RO	Reserved.	0
0	RB_SLP_USB_WAKE	RWA	Enable USB event wake up system: 1: Enable; 0: Disable.	0

Peripheral sleep power control register (R8_SLP_POWER_CTRL)

Bit	Name	Access	Description	Reset value
7	Reserved	RO	Reserved.	0
6	RB_RAM_RET_LV	WA	Auxiliary power low voltage enable during SRAM sleep (write only): 0: Normal power voltage, slightly high-power consumption during sleep; 1: Low power voltage, slightly low-power consumption during sleep.	0
5	RB_SLP_CLK_RAM2K	RWA	SRAM clock control of RAM2K: 1: Disable; 0: Enable.	0
4	RB_SLP_CLK_RAMX	RWA	Clock control of main SRAM (RAM16K): 1: Disable; 0: Enable.	0
[3:0]	Reserved	RO	Reserved.	0000b

Sleep power management register (R16_POWER_PLAN)

Bit	Name	Access	Description	Reset value
15	RB_PWR_PLAN_EN	RWA/ WZ	Sleep power planning control enable: 1: Enable planning; 0: Disable or end planning. The power planning is enabled for execution when entering sleep or power-off mode later, and this bit is automatically cleared after execution.	0
[14:11]	RB_PWR_MUST_0010	RWA	Reserved, 0010b must be written.	0010b
10	RB_PWR_DCDC_PRE	RWA	DC-DC bias circuit enable (effective immediately): 1: Enable; 0: Disable.	0
9	RB_PWR_DCDC_EN	RWA	DC-DC enable bit (effective immediately): 1: Enable DC-DC, the direct power is off; 0: Disable DC-DC, the direct power is on;	0
8	RB_PWR_LDO_EN	RWA	Internal LDO control (sleep planning): 1: Turn on LDO; 0: Plan to turn off LDO, saving more power.	1
7	RB_PWR_SYS_EN	RWA	System power control (sleep planning): 1: Provide system power (on VSW pin); 0: Turn off the system power, plan to enter sleep mode or power-off mode.	1
6	Reserved	RWA	Reserved, 0 must be written.	1
5	Reserved	RO	Reserved.	0
4	RB_PWR_RAM16K	RWA	SRAM power supply of RAM16K (sleep planning): 1: Dual power; 0: No auxiliary power.	1
3	RB_PWR_EXTEND	RWA	USB and RF configuration power supply (sleep planning): 1: Dual power; 0: No auxiliary power.	1
2	RB_PWR_CORE	RWA	Power of the core and basic peripherals (sleep planning): 1: Dual power; 0: No auxiliary power.	1
1	RB_PWR_RAM2K	RWA	SRAM power supply of RAM2K (sleep planning): 1: Dual power; 0: No auxiliary power.	1
0	RB_PWR_XROM	RWA	FlashROM power supply (sleep planning): 1: Continuous power; 0: Power off during sleep.	1

This register is preset for sleep planning except RB_PWR_DCDC_PRE and RB_PWR_DCDC_EN, and its power configuration will take effect after enterrng the low-power sleep mode and power-down mode.

Auxiliary power adjustment control register (R16_AUX_POWER_ADJ)

Bit	Name	Access	Description	Reset value
[15:12]	Reserved	RO	Reserved.	0000b
[11:8]	Reserved	RO	Reserved. Read-only bits. Writing has no	XXXXb

			effect.	
[7:6]	Reserved	RO	Reserved.	00b
[5:3]	Reserved	RWA	Reserved. The original value must be kept unchanged when writing.	1XXb
[2:0]	RB_ULPLDO_ADJ	RWA	The auxiliary power output voltage adjustment value of ultra-low power LDO (the value is for reference only, and it is not recommended to modify): 000: 0.77V; 001: 0.80V; 010: 0.84V; 011: 0.88V; 100: 0.91V; 101: 0.95V; 110: 0.99V; 111: 1.03V.	XXXb (010b)

Battery voltage detection control register (R8_BAT_DET_CTRL)

Bit	Name	Access	Description	Reset value
[7:4]	Reserved	RO	Reserved.	0000b
3	RB_BAT_LOW_IE	RWA	Battery low voltage interrupt enable: 1: Enable; 0: Disable.	0
2	RB_BAT_LOWER_IE	RWA	Battery ultra low voltage interrupt enable: 1: Enable; 0: Disable.	0
1	RB_BAT_MON_EN	RWA	Low-power battery voltage monitoring function enabled: 1: Enable, increasing about 1uA current; 0: Disable.	0
0	RB_BAT_LOW_VTHX	RWA	When RB_BAT_MON_EN=1, set the low-power low voltage monitoring threshold. Refer to RB_BAT_LOW_VTH.	0
0	RB_BAT_DET_EN	RWA	High-precision battery voltage detection function enable when RB_BAT_MON_EN=0 1: Enable, and turn on modules such as reference voltage simultaneously, and the current is 210uA in sleep mode; 0: Disable.	0

Note: If the battery voltage reaches the lower voltage detection threshold and both RB_BAT_LOWER_IE and RB_BAT_LOW_IE are enabled (only one of them is enabled under normal conditions), NMI non-maskable interrupt will be generated, which is equivalent to increasing the interrupt priority.

Battery voltage detection configuration register (R8_BAT_DET_CFG)

Bit	Name	Access	Description	Reset value
[7:2]	Reserved	RO	Reserved.	000000b
[1:0]	RB_BAT_LOW_VTH	RWA	When RB_BAT_MON_EN=0, set the high-precision ultra-low voltage and low voltage detection threshold: (ultra-low voltage reference threshold, low voltage reference threshold) 00: 1.7V, 1.95V; 01: 1.9V, 2.15V;	01b

			10: 2.1V, 2.35V; 11: 2.3V, 2.55V. When RB_BAT_MON_EN=1, take RB_BAT_LOW_VTHX as the highest bit, adding these 2 bits, 3 bits are used to set the low-power low-voltage monitoring threshold: 000~111: Reserved, to be tested.	

Battery status register (R8_BAT_STATUS)

Bit	Name	Access	Description	Reset value
[7:2]	Reserved	RO	Reserved.	000000b
1	RB_BAT_STAT_LOW	RO	The result of battery low-voltage detection or low-voltage monitoring, indicating that the battery voltage is in low voltage status: 1: Below the low voltage threshold; 0: No.	0
0	RB_BAT_STAT_LOWER	RO	When RB_BAT_MON_EN=0, it indicates that battery voltage is in lower voltage status: 1: Below the lower voltage threshold; 0: No.	0

5.3 Low power mode

After the system is reset, the microcontroller is in normal operation. When the MCU does not need to run, an appropriate low-power mode can be selected to save power. The user needs to select an appropriate low-power mode based on conditions such as the lowest power consumption, the fastest startup time and available wake-up events.

The chip provides the following 4 main low-power modes:

- Idle mode
  All peripherals remain powered, the core stops running, and the clock system is running. After a wake-up event is detected, it can be woken up immediately.
- Halt mode
  On the basis of idle mode, the clock system stops. After a wake-up event is detected, the clock will run first, and then the core will be woken up to run.
- Sleep mode:
  The main LDO is turned off, and the ultra-low power ULP-LDO maintains the power supply of PMU, core and basic peripherals. You can select whether to turn on LSE or LSI, and to maintain power supply of RAM2K, RAM16K, USB and RF configurations. After a wake-up event is detected, first the main LDO is turned on, then the clock will run, and finally the core will be woken up, the program will continue to run, and a higher frequency can be reset when needed.
- Shutdown mode:
  Based on the sleep mode, the core and basic peripherals, USB and RF configurations are turned off, and you can select whether to turn on LSE or LSI, and to maintain power supply of RAM2K and RAM16K. After detecting a wake-up event, PMU will perform a GRWSM reset, and the software can distinguish RPOR based on the reset flag RB_RESET_FLAG and the data retained in optional RAM.

The following table describes in detail the characteristics and wake-up ways in several low-power modes:

Table 5-2 Low power modes

Mode	Feature	Entry Conditions	Wake-up Event	Power Consumption
Idle	The peripherals are powered normally, the core stops running, The clock system is running, but the clocks of each peripheral can be selected to turn off by the peripheral clock control bit.	Set SLEEPDEEP=0, Execute __WFI() or __WFE() after setting the wake-up conditions.	I/O or RTC or BAT or USB	1.5mA
Halt	The peripherals are powered normally, the core stops running, the clock system stops (PLL/HSE stops).	Set SLEEPDEEP=1, Execute __WFI() or __WFE() after setting the wake-up conditions.	I/O or RTC or BAT or USB	320uA
Sleep	The main LDO is off, and the ultra-low power ULP-LDO maintains power supply of PMU, core and basic peripherals, you can select whether to turn on LSE or LSI, and to maintain power supply of RAM2K, RAM16K, USB and RF configurations.	Set SLEEPDEEP=1, Set POWER_PLAN, Execute __WFI() or __WFE() after setting the wake-up conditions.	I/O or RTC or BAT. The chip will continue to run after woken up	1.4uA to 6uA
Shutdown	Ultra-low power consumption LDO maintains power supply of PMU, you can select whether to turn on LSE or LSI, and to maintain power supply of RAM2K and RAM16K for data retention.	Set SLEEPDEEP=1, Set POWER_PLAN, Execute __WFI() or __WFE() after setting the wake-up conditions.	I/O or RTC or BAT. The chip will automatically reset after woken up	0.3uA to 1.3uA

The following table describes the detailed configurations of several low-power modes:

Table 5-3 Detailed configuration examples of low power modes

Planning configuration	SYS_EN	RAM2K	RAM16K	CK32K	CORE	EXTEND	Power consumption (for reference only)
Maintain supply function	System power VSW	Data area 2KB	Data area 16KB	LSE or LSI RTC wake-up	CPU core and basic peripherals	USB and RF configurations	PMU and RTC registers are always powered, about 0.3uA
Common configurations in shutdown mode	0	0	0	0	0	0	0.3uA
	0	1	0	0	0	0	1.0uA
	0	0	0	1	0	0	0.6uA
	0	1	0	1	0	0	1.3uA
Common configurations in sleep mode	0	1	0	0	1	0	1.4uA
	0	1	0	1	1	0	1.7uA
	0	0	1	0	1	0	4.7uA
	0	0	1	1	1	0	5.0uA
	0	1	1	1	1	1	6.0uA

5.4 DC-DC operation steps

Enable DC-DC power mode (It is needed to confirm the inductance and capacitance required by DC-DC on the external hardware circuit before enabling)

(1) Enter safe access mode: first write 0x57 and then write 0xA8 to the R8_SAFE_ACCESS_SIG register;

(2) Open DC-DC bias circuit: set the RB_PWR_DCDC_PRE in the R16_POWER_PLAN register to 1;

(3) Turn on the DC-DC power: set the RB_PWR_DCDC_EN in the R16_POWER_PLAN register to 1 and enable DC-DC.

Disable DC-DC and switch to direct power mode

(1) Enter safe access mode: first write 0x57 and then write 0xA8 to the R8_SAFE_ACCESS_SIG register;

(2) Clear the RB_PWR_DCDC_EN and RB_PWR_DCDC_PRE control bits in the R16_POWER_PLAN register.

Chapter 6 System clock and RTC

6.1 Introduction to system clock

The following different clock sources can be selected to drive the system clock HCLK (Fsys)

- Frequency division of HSE.
- Internal PLL (480MHz by default) frequency division.
- LSE or LSI original clock CK32K.

Any clock source can be turned on or off independently, thereby optimizing system power consumption.

6.1.1 Clock architecture

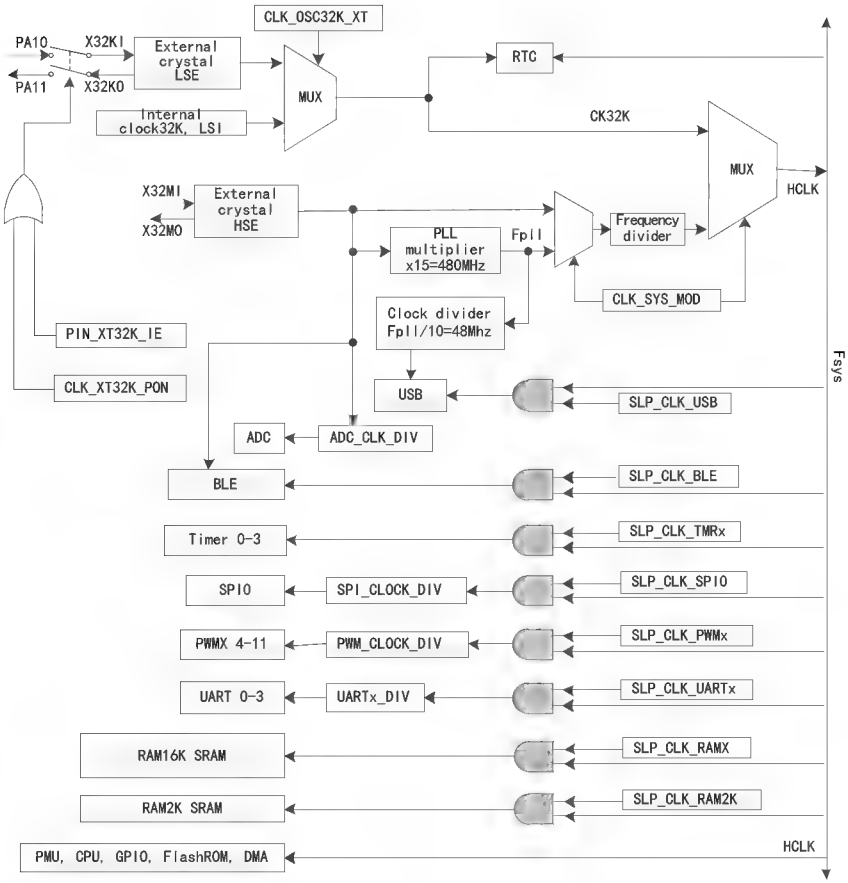

Figure 6-1 Clock tree block diagram

The figure above is the internal clock tree architecture of the system. The RTC function uses the 32KHz clock source CK32K, so the low-frequency clock must be turned on when using these functions; USB data transmission depends on the clock source generated by PLL frequency division; other peripheral driven clock and digital control logic are driven by the system clock or by frequency re-division.

6.2 Introduction to RTC

The Real-time Clock (RTC) is an independent timer that contains a set of counters that can count continuously. Under the corresponding software configuration, a simple calendar function is available. Reset the current time and date by modifying the value of counter.

The RTC register is powered as often as the PMU. After the system is reset or woken up from a low-power mode, RTC setting and time remain unchanged.

6.2.1 Main features

- Two modes configurable:
  - — Timing mode: A fixed cycle time (timing) can be selected for the software to generate interrupt notifications.
  - — Trigger mode: Match a target alarm clock time preset by the software to generate an interrupt notification.
- Three groups of 16-bit counters that provide count of CK32K primitive cycle, 2-second cycle and 1-day cycle.

6.3 Register description

Table 6-1 Clock and oscillator control registers

Name	Access address	Description	Reset value
R16_CLK_SYS_CFG	0x40001008	System clock configuration register	0x0005
R8_HFCK_PWR_CTRL	0x4000100A	High frequency clock module power control register	0x04
R16_INT32K_TUNE	0x4000102C	Internal 32KHz clock tune register	0x0800
R8_XT32K_TUNE	0x4000102E	External 32KHz clock resonance tune register	0xC3
R8_CK32K_CONFIG	0x4000102F	32KHz oscillator configuration register	0xX2
R8_XT32M_TUNE	0x4000104E	External 32MHz clock resonance tune register	0x31
R16_OSC_CAL_CNT	0x40001050	Oscillator frequency calibration count value register	0xXXXX
R8_OSC_CAL_CTRL	0x40001052	Oscillator frequency calibration control register	0x02
R8_PLL_CONFIG	0x4000104B	PLL configuration register	0x4A
R8_RTC_FLAG_CTRL	0x40001030	RTC flag and control register	0x30
R8_RTC_MODE_CTRL	0x40001031	RTC mode configuration register	0x02
R32_RTC_TRIG	0x40001034	RTC trigger value register	0x00000000
R16_RTC_CNT_32K	0x40001038	RTC based 32768Hz count value register	0xXXXXXXXX
R16_RTC_CNT_2S	0x4000103A	RTC count value register in the unit of 2S	0xXXXXXXXX
R32_RTC_CNT_DAY	0x4000103C	RTC count value register in the unit of day	0x0000XXXX

System clock configuration register (R16_CLK_SYS_CFG)

Bit	Name	Access	Description	Reset value
[15:8]	Reserved	RO	Reserved.	00h
[7:6]	RB_CLK_SYS_MOD	RWA	HCLK system clock source mode selection: 00/10: CK32M (32MHz by default) for frequency division; 01: PLL (480MHz by default) for frequency	00b

			division; 11: CK32K (32KHz by default), used as HCLK.	
5	Reserved	RO	Reserved.	0
[4:0]	RB_CLK_PLL_DIV	RWA	HCLK output clock frequency division factor, the minimum value is 2. 0 means the maximum value 32. Write 1 to disable HCLK.	00101b

Calculate:
Fck32m = XT_32MHz;
Fck32k = RB_CLK_OSC32K_XT ? XT_32KHz : RC_32KHz;
Fpll = Fck32m * 15 = 480MHz;
Fsys = RB_CLK_SYS_MOD==3?Fck32k:(RB_CLK_SYS_MOD[0]? Fpll :Fck32m)/RB_CLK_PLL_DIV;
Power-on default value Fsys = Fck32m/ RB_CLK_PLL_DIV = 32MHz / 5 = 6.4MHz;
Fsys range: 32KHz, 2MHz~10MHz, 15MHz-60MHz

High frequency clock module power control register (R8_HFCK_PWR_CTRL)

Bit	Name	Access	Description	Reset value
[7:5]	Reserved	RO	Reserved.	000b
4	RB_CLK_PLL_PON	RWA	PLL power control bit: 1: Power on; 0: Power off.	0
3	Reserved	RO	Reserved.	0
2	RB_CLK_XT32M_PON	RWA	External 32MHz oscillator power control bit: 1: Power on; 0: Power off.	1
[1:0]	Reserved	RO	Reserved.	00b

Internal 32KHz clock tune register (R16_INT32K_TUNE)

Bit	Name	Access	Description	Reset value
[15:12]	Reserved	RO	Reserved.	0000b
[11:0]	RB_INT32K_TUNE	RWA	Internal RC 32KHz clock frequency calibration value.	800h

External 32KHz clock resonance tune register (R8_XT32K_TUNE)

Bit	Name	Access	Description	Reset value
[7:4]	RB_XT32K_C_LOAD	RWA	Select the built-in load capacitor that matches the external 32KHz crystal (which may affect RTC clock accuracy): 0000: The built-in load capacity is 2pF; Others: Capacity = RB_XT32K_C_LOAD + 12pF, 0001b-1111b correspond to approximately 13pF-27pF respectively. Choose according to the parameters of crystal used.	1100b
[3:2]	Reserved	RO	Reserved.	00b

[1:0]	RB_XT32K_I_TUNE	RWA	External 32KHz oscillator bias current selection: 00: 70% of rated current; 01: rated current; 10: 140% of rated current; 11: 200% of rated current.	11b

32KHz oscillator configuration register (R8_CK32K_CONFIG)

Bit	Name	Access	Description	Reset value
7	RB_32K_CLK_PIN	RO	32KHz clock pin status (asynchronous signal).	X
[6:3]	Reserved	RO	Reserved.	0000b
2	RB_CLK_OSC32K_XT	RWA	CK32K (32KHz) clock source selection bit: 1: External 32KHz oscillator; 0: Internal 32KHz oscillator.	0
1	RB_CLK_INT32K_PON	RWA	Internal 32KHz oscillator power control bit: 1: Power on; 0: Power off.	1
0	RB_CLK_XT32K_PON	RWA	External 32KHz oscillator power control bit: 1: Power on; 0: Power off.	0

External 32MHz clock resonance tune register (R8_XT32M_TUNE)

Bit	Name	Access	Description	Reset value
7	Reserved	RO	Reserved.	0
[6:4]	RB_XT32M_C_LOAD	RWA	Select the built-in load capacitor that matches the external 32MHz crystal (which may affect wireless communication): Capacity = RB_XT32M_C_LOAD * 2 + 10pF, 000b-111b correspond to approximately 10pF-24pF respectively. Choose according to the parameters of crystal used; the common value is 111b.	011b
[3:2]	Reserved	RO	Reserved.	00b
[1:0]	RB_XT32M_I_BIAS	RWA	External 32MHz oscillator bias current selection: 00: 75% of rated current; 01: Rated current; 10: 125% of rated current; 11: 150% of rated current.	01b

Oscillator frequency calibration count value register (R16_OSC_CAL_CNT)

Bit	Name	Access	Description	Reset value
[15:14]	Reserved	RO	Reserved.	00b
[13:0]	RB_OSC_CAL_CNT	RO	The count value based on system frequency of 5 CK32K cycles, used to calibrate the internal 32KHz oscillator frequency.	XXXXh

Oscillator frequency calibration control register (R8_OSC_CAL_CTRL)

Bit	Name	Access	Description	Reset value
[7:2]	Reserved	RO	Reserved.	000000b
1	RB_OSC_CNT_HALT	RO	Oscillator frequency calibration counter counting status bit: 1: Counting is being paused; 0: Counting is in progress.	1
0	RB_OSC_CNT_EN	RWA	Oscillator frequency calibration counter enable bit: 1: Enable counting; 0: Disable counting.	0

PLL configuration register (R8_PLL_CONFIG)

Bit	Name	Access	Description	Reset value
7	Reserved	RO	Reserved.	0
[6:0]	RB_PLL_CFG_DAT	RWA	PLL configuration parameters.	1001010b

RTC flag and control register (R8_RTC_FLAG_CTRL)

Bit	Name	Access	Description	Reset value
7	RB_RTC_TRIG_FLAG	RO	RTC trigger mode activation flag.	0
6	RB_RTC_TMR_FLAG	RO	RTC timing mode activation flag.	0
5	RB_RTC_TRIG_CLR	RW	When the trigger mode is disabled, this bit is fixed as 1. When the trigger mode is enabled, write 1, clear the trigger mode activation flag RB_RTC_TRIG_FLAG and automatically cleared to 0.	1
4	RB_RTC_TMR_CLR	RW	When the timing mode is disabled, this bit is fixed as 1. When the timing mode is enabled, write 1, clear the timing mode activation flag RB_RTC_TMR_FLAG and automatically cleared to 0.	1
[3:0]	Reserved	RO	Reserved.	0000b

RTC mode configuration register (R8_RTC_MODE_CTRL)

Bit	Name	Access	Description	Reset value
7	RB_RTC_LOAD_HI	RWA	Write 1 to load the high word of RTC counter, and automatically cleared to 0 after loading. Load R32_RTC_TRIG (actually only the low 14 bits) to R32_RTC_CNT_DAY.	0
6	RB_RTC_LOAD_LO	RWA	Write 1 to load the low word of RTC counter, and automatically cleared after loading. Load the high 16 bits of R32_RTC_TRIG to	0

			R16_RTC_CNT_2S; load the low 16 bits of R32_RTC_TRIG to R16_RTC_CNT_32K.	
5	RB_RTC_TRIG_EN	RWA	RTC trigger mode enable bit: 1: Enable; 0: Disable.	0
4	RB_RTC_TMR_EN	RWA	RTC timing mode enable bit: 1: Enable; 0: Disable.	0
3	RB_RTC_IGNORE_B0	RWA	Ignore and compare the lowest bit of matching value in trigger mode: 1: Ignore the lowest bit; 0: Compare the lowest bit.	0
[2:0]	RB_RTC_TMR_MODE	RWA	RTC timing mode fixed period (timing) selection: 000:0.125S; 001:0.25S; 010:0.5S; 011:1S; 100:2S; 101:4S; 110:8S; 111:16S.	010b

RTC trigger value register (R32_RTC_TRIG)

Bit	Name	Access	Description	Reset value
[31:0]	R32_RTC_TRIG	RWA	The preset matching value in RTC trigger mode, and the high 16 bits and low 16 bits are matched with R16_RTC_CNT_2S and R16_RTC_CNT_32K respectively. Cooperate with RB_RTC_LOAD_LO and RB_RTC_LOAD_HI to update the current value of RTC counter.	0000h

Note: The preset matching value is not directly written into the target time, and it involves simple calculations. Please refer to the following instructions.

RTC-based 32768Hz count value register (R16_RTC_CNT_32K)

Bit	Name	Access	Description	Reset value
[15:0]	R16_RTC_CNT_32K	RO	RTC-based 32768Hz count value register.	XXXXh

RTC count value register in the unit of 2S (R16_RTC_CNT_2S)

Bit	Name	Access	Description	Reset value
[15:0]	R16_RTC_CNT_2S	RO	RTC current count value in the unit of 2S.	XXXXh

RTC count value register in the unit of day (R32_RTC_CNT_DAY)

Bit	Name	Access	Description	Reset value
[31:16]	Reserved	RO	Reserved.	0000h
[15:14]	Reserved	RO	Reserved.	00b
[13:0]	R32_RTC_CNT_DAY	RO	RTC current count value in the unit of day.	XXXXX XXXXX XXXXb

6.4 Functional description and configuration

6.4.1 RTC counter initialization

(1) Set the value of the R32_RTC_TRIG register and set RB_RTC_LOAD_HI to load the value of the R32_RTC_TRIG register into the R32_RTC_CNT_DAY register;

(2) Set the value of the R32_RTC_TRIG register and set RB_RTC_LOAD_LO to load the high and low 16-bit values of the R32_RTC_TRIG register to the R16_RTC_CNT_2S register and the R16_RTC_CNT_32K register respectively.

6.4.2 Switch RTC clock source to LSE crystal

(1) Confirm that the GPIO pins where X32KI and X32KO are located are not set as outputs, with no pull-up and pull-down resistors, and only crystals are provided;

(2) Configure the R8_CK32K_CONFIG register, set RB_CLK_XT32K_PON to 1, and turn on the external 32KHz crystal oscillator;

(3) It is recommended to set RB_XT32K_I_TUNE to the maximum first, and wait for the crystal oscillator to stabilize (about several hundreds of mS) and then change to the rated current;

(4) Configure the R8_CK32K_CONFIG register, set RB_CLK_OSC32K_XT to 1, and switch clock source to the crystal oscillator;

(5) Wait for at least half of the 32KHz clock cycle, usually 16uS, to actually complete the switching of clock source.

6.4.3 RTC timing function

(1) Configure R8_RTC_MODE_CTRL register, set RB_RTC_TMR_MODE to select the appropriate timing period, set RB_RTC_TMR_EN to 1, and turn on RTC timing function;

(2) After reaching the timing period, RTC timing activation flag RB_RTC_TMR_FLAG and interrupt will be generated; check R8_RTC_FLAG_CTRL register and set RB_RTC_TMR_CLR to clear the flag.

6.4.4 RTC Trigger Function

(1) Set the target matching value in R32_RTC_TRIG register, and see the calculation and operation steps:
Calculate the target time value by taking the current time R32_RTC_CNT_32K (high 16 bits R16_RTC_CNT_2S and low 16 bits R16_RTC_CNT_32K) plus the interval time DelayTime (in the unit of S), T32 = R32_RTC_CNT_32K + DelayTime * 32768,
Write T32 into the R32_RTC_TRIG register to complete the matching value setting;

(2) Configure R8_RTC_MODE_CTRL register, set RB_RTC_TRIG_EN to 1, and turn on RTC trigger function;

(3) When the current RTC count values R16_RTC_CNT_2S and R16_RTC_CNT_32K respectively match the preset high and low 16 bits of R32_RTC_TRIG, RTC trigger activation flag RB_RTC_TRIG_FLAG and interrupt are generated, and the flag can be cleared by setting RB_RTC_TRIG_CLR.

(4) If the RTC time has been calibrated, target absolute time trigger is supported, and the target time value T32 is calculated based on the target year/month/day/hour/minute/second/millisecond. Other steps are the same as above. Please refer to the evaluation board example program for details.

6.4.5 Calibrate internal 32K clock LSI with HSE

Refer to evaluation board example program.

Chapter 7 General purpose I/O and alternate functions

7.1 Introduction to GPIO

The chip provides 2 sets of GPIO ports: PA and PB, with a total of 22 GPIO pins. Each pin has interrupt and wake-up functions, and some pins have alternate and mapping functions.

Each GPIO port has a 32-bit direction configuration register (R32_Px_DIR), a 32-bit pin input register (R32_Px_PIN), a 32-bit data output register (R32_Px_OUT), a 32-bit data reset register (R32_Px_CLR), a 32-bit pull-up resistor configuration register (R32_Px_PU), a 32-bit pull-down resistor/drive capability configuration register (R32_Px_PD_DRV).

In PA port, only PA[4], PA[5], PA[8]-PA[15] bits are valid, corresponding to 10 GPIO pins on the chip.

In PB port, only PB[0], PB[4], PB[6], PB[7], PB[10]-PB[15], PB[22] and PB[23] bits are valid, corresponding to 12 GPIO pins on the chip.

Each I/O port bit can be freely programmed, but the I/O port register must be accessed by 8-bit, 16-bit or 32-bit words. If the alternate function of pin is not enabled, it will be used as a general-purpose I/O port by default.

The following figure is the block diagram of GPIO internal architecture:

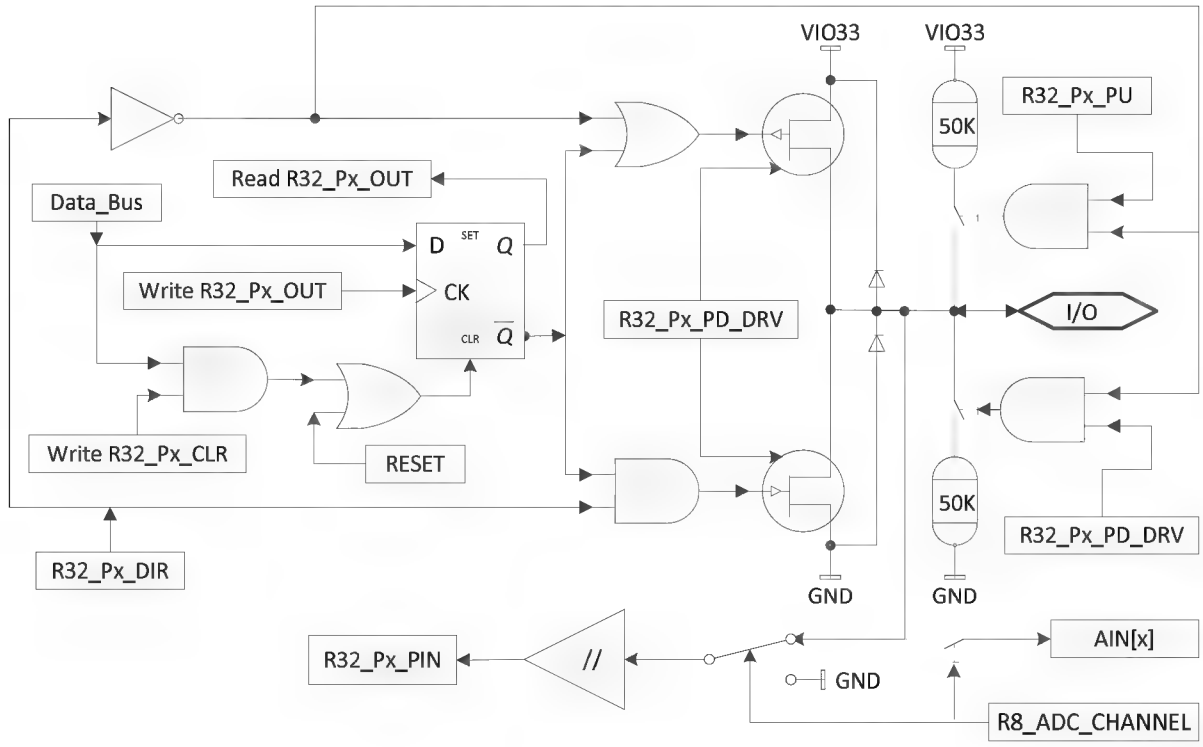

Figure 7-1 I/O internal architecture block diagram

7.2 External interrupt/wakeup

All I/O pins of the chip have an interrupt function and can realize sleep wakeup.

In order to use external interrupts, the port bits must be configured in input mode. And provide 4 kinds of trigger modes: high level, low level, rising edge, falling edge.

The wake-up function needs to enable the interrupt R16_Px_INT_EN of the port bit, and turn on the GPIO

wake-up control bit (RB_SLP_GPIO_WAKE) in the R8_SLP_WAKE_CTRL register.

7.3 GPIO alternate functions and remapping

7.3.1 Alternate functions

Some I/O pins have the alternate functions. After powering on, all I/O pins have general-purpose I/O functions by default. After enabling various functional modules, the corresponding original GPIO pins are configured as corresponding functional pins of each functional module.

If a pin has multiple alternate functions, and multiple functions are enabled, please refer to the function order in the "Alternate Function" list in the pin description in Section 1.2 for the priority order of alternate functions.

For example: If the PB23 pin alternates as RST#/TMR0_/TXD2/PWM11, RST# reset input function has a highwe priority, and PWM11 output function has the lowest priority. In this way, the alternate functions with the relatively higher priority of the pin whose functions with the lowest priority need not to be used can be enabled among multiple alternate functions.

The following table lists some of the GPIO configurations of some function pins used for peripheral modules.

Table 7-1 Timer x

TMR0/1/2/3 pin	Functional configuration	GPIO configuration
TMRx	Input capture channel x	Input (floating input/pull-up input/pull-down input)
	Output PWM channel x	Push-pull output

Table 7-2 UARTx

UART0/1/2/3 pin	Functional configuration	GPIO configuration
TXDx	UART transmit x	Push-pull output
RXDx	UART receice x	Pull-up input (recommended) or floating input
RTS, DTR	MODEM signal output or RS485 control	Push-pull output
CTS, DSR	MODEM signal input	Pull-up input (recommended) or floating input

Table 7-3 SPI0

SPI0 pin	Functional configuration	GPIO configuration
SCK0	Clock output in master mode	Push-pull output
	Clock input in slave mode	Input (floating input/pull-up input/pull-down input)
MOSI	Full duplex mode-master mode	Push-pull output
	Full duplex mode-slave mode	Input (floating input/pull-up input/pull-down input)
	Half duplex mode-master mode	Not used, can be used as general purpose I/O
	Half duplex mode-slave mode	Not used, can be used as general purpose I/O
MISO	Full duplex mode-master mode	Input (floating input/pull-up input/pull-down input)
	Full duplex mode-slave mode	Input (pull-up is recommended, automatically switched to push-pull output after chip select) or push-pull output (it is forbidden to be used for bus connection)

	Half duplex mode-master mode	Input or push-pull output, manual switching
	Half duplex mode-slave mode	Input (pull-up is recommended, automatically switched to push-pull output after chip select)
SCS	Chip select output in master mode	Push-pull output (can be replaced with other pins)
	Chip select input in slave mode	Pull-up input (recommended) or floating input

Table 7-4 ADC

ADC sampling channel pin	Functional configuration	GPIO configuration
AINx	Analog digital conversion input channel	Floating input

Table 7-5 USB

USB signal pin	Functional configuration	GPIO configuration
USB_DM	Connected to internal USB transceiver	Floating input
USB_DP	Connected to internal USB transceiver	Floating input

7.3.2 Remapping of function pins

In order to enable the peripheral functions and optimize the utilization rate at the same time, some function pins can be remapped to other pins by setting the function pin remapping register (R16_PIN_ALTERNATE).

Table 7-7 Alternate function remapping pins

Peripheral function pins	Default GPIO pins	Remapped GPIO pins
SPI0	PA[12]/PA[13]/PA[14]/PA[15]	PB[12]/PB[13]/PB[14]/PB[15]
RXD1/TXD1	PA[8]/PA[9]	PB[12]/PB[13]
RXD0/TXD0	PB[4]/PB[7]	PA[15]/PA[14]
TMR2/PWM2/CAP2	PA[11]	PB[11]
TMR1/PWM1/CAP1	PA[10]	PB[10]
TMR0/PWM0/CAP0	PA[9]	PB[23]

7.4 Register description

Table 7-8 GPIO registers

Name	Access address	Description	Reset value
R16_PIN_ALTERNATE	0x40001018	Function pin remapping register	0x0000
R16_PIN_ANALOG_IE	0x4000101A	Peripheral analog pin configuration register	0x0000
R16_PA_INT_EN	0x40001090	PA port interrupt enable register	0x0000
R16_PB_INT_EN	0x40001092	PB port interrupt enable register	0x0000
R16_PA_INT_MODE	0x40001094	PA port interrupt mode configuration register	0x0000
R16_PB_INT_MODE	0x40001096	PB port interrupt mode configuration register	0x0000
R16_PA_INT_IF	0x4000109C	PA port interrupt flag register	0x0000
R16_PB_INT_IF	0x4000109E	PB port interrupt flag register	0x0000

R32_PA_DIR	0x400010A0	PA port direction configuration register	0x00000000
R32_PA_PIN	0x400010A4	PA port pin input register	0x0000XXX0
R32_PA_OUT	0x400010A8	PA port data output register	0x00000000
R32_PA_CLR	0x400010AC	PA port data reset register	0x00000000
R32_PA_PU	0x400010B0	PA port pull-up resistor configuration register	0x00000000
R32_PA_PD_DRV	0x400010B4	PA port pull-down/drive configuration register	0x00000000
R32_PB_DIR	0x400010C0	PB port direction configuration register	0x00000000
R32_PB_PIN	0x400010C4	PB port pin input register	0x00X0XXXX
R32_PB_OUT	0x400010C8	PB port data output register	0x00000000
R32_PB_CLR	0x400010CC	PB port data reset register	0x00000000
R32_PB_PU	0x400010D0	PB port pull-up resistor configuration register	0x00000000
R32_PB_PD_DRV	0x400010D4	PB port pull-down/drive configuration register	0x00000000

Function pin remapping register (R16_PIN_ALTERNATE)

Bit	Name	Access	Description	Reset value
[15:12]	Reserved	RO	Reserved.	0000b
[11:9]	Reserved	RO	Reserved.	000b
8	RB_PIN_SPI0	RW	SPI0 function pin mapping selection bit: 1: SCK0_/SCS_/MOSI_/MISO_ is mapped to PB[12]/PB[13]/PB[14]/PB[15]; 0: SCK0/SCS/MOSI/MISO is mapped to PA[12]/PA[13]/PA[14]/PA[15].	0
7	Reserved	RO	Reserved.	0
6	Reserved	RO	Reserved.	0
5	RB_PIN_UART1	RW	UART1 function pin mapping selection bit: 1: RXD1_/TXD1_ is mapped to PB[12]/PB[13]; 0: RXD1/TXD1 is mapped to PA[8]/PA[9].	0
4	RB_PIN_UART0	RW	UART0 function pin mapping selection bit: 1: RXD0_/TXD0_ is mapped to PA[15]/PA[14]; 0: RXD0/TXD0 is mapped to PB[4]/PB[7].	0
3	Reserved	RO	Reserved.	0
2	RB_PIN_TMR2	RW	TMR2 function pin mapping selection bit: 1: TMR2_/PWM2_/CAP2_ is mapped to PB[11]; 0: TMR2/PWM2/CAP2 is mapped to PA[11].	0
1	RB_PIN_TMR1	RW	TMR1 function pin mapping selection bit: 1: TMR1_/PWM1_/CAP1_ is mapped to PB[10]; 0: TMR1/PWM1/CAP1 is mapped to PA[10].	0
0	RB_PIN_TMR0	RW	TMR0 function pin mapping selection bit: 1: TMR0_/PWM0_/CAP0_ is mapped to	0

			PB[23]; 0: TMR0/PWM0/CAP0 is mapped to PA[9].	

Peripheral analog pin configuration register (R16_PIN_ANALOG_IE)

Bit	Name	Access	Description	Reset value
15	RB_PIN_ADC4_5_IE	RW	ADC/TKEY 4/5 channel pin digital input disable: 1: Disable PA14-15 digital input to save power consumption; 0: Enable digital input.	0
14	RB_PIN_ADC2_3_IE	RW	ADC/TKEY 2/3 channel pin digital input disable: 1: Disable PA12-13 digital input to save power consumption; 0: Enable digital input.	0
13	RB_PIN_XT32K_IE	RW	32KHz crystal LSE pin digital input disable: 1: Disable PA10-11 digital input to save power consumption; 0: Enable digital input.	0
12	RB_PIN_ADC13_IE	RW	ADC/TKEY 13 channel pin digital input disable: 1: Disable PA9 digital input to save power consumption; 0: Enable digital input.	0
11	RB_PIN_ADC12_IE	RW	ADC/TKEY 12 channel pin digital input disable: 1: Disable the PA8 digital input to save power consumption; 0: Enable digital input.	0
10	RB_PIN_ADC1_IE	RW	ADC/TKEY 1 channel pin digital input disable: 1: Disable PA5 digital input to save power consumption; 0: Enable digital input.	0
9	RB_PIN_ADC0_IE	RW	ADC/TKEY 0 channel pin digital input disable: 1: Disable PA4 digital input to save power consumption; 0: Enable digital input.	0
8	RB_PIN_ADC8_9_IE	RW	ADC/TKEY 8/9 channel pin digital input disable: 1: Disable PB0/PB6 digital input to save power consumption; 0: Enable digital input.	0
7	RB_PIN_USB_IE	RW	USB pin enable: 1: PB10-11 are USB communication pins; 0: PB10-11 are not used for USB communication.	0

6	RB_PIN_USB_DP_PU	RW	Internal pull-up resistor of USB UD+ pin enable: 1: Forced to enable pull-up (RB_UC_DEV_PU_EN does not work in sleep or power-down mode, so replace it); 0: RB_UC_DEV_PU_EN controls pull-up.	0
[5:0]	Reserved	RO	Reserved.	000000b

Note: If the pin is used for analog function (ADC/TouchKey), it is recommended to turn off the digital input function of the pin, namely to set the digital input as disabled, thus reducing power consumption and helping reduce interference.

PA port interrupt enable register (R16_PA_INT_EN)

Bit	Name	Access	Description	Reset value
[15:0]	R16_PA_INT_EN	RW	PA pin interrupt enable bit: 1: Enable the corresponding interrupt; 0: Disable the corresponding interrupt.	0000h

PB port interrupt enable register (R16_PB_INT_EN)

Bit	Name	Access	Description	Reset value
[15:0]	R16_PB_INT_EN	RW	PB pin interrupt enable bit: 1: Enable the corresponding interrupt; 0: Disable the corresponding interrupt.	0000h

Note: R16_PB_INT_EN[9] corresponds to PB23, and R16_PB_INT_EN[8] corresponds to PB22.

PA port interrupt mode configuration register (R16_PA_INT_MODE)

Bit	Name	Access	Description	Reset value
[15:0]	R16_PA_INT_MODE	RW	PA pin interrupt mode select bit: 1: Edge trigger; 0: Level trigger.	0000h

PB port interrupt mode configuration register (R16_PB_INT_MODE)

Bit	Name	Access	Description	Reset value
[15:0]	R16_PB_INT_MODE	RW	PB pin interrupt mode select bit: 1: Edge trigger; 0: Level trigger.	0000h

Note: R16_PB_INT_MODE[9] corresponds to PB23, and R16_PB_INT_MODE[8] corresponds to PB22.

PA port interrupt flag register (R16_PA_INT_IF)

Bit	Name	Access	Description	Reset value
[15:0]	R16_PA_INT_IF	RW1	PA pin interrupt flag bit, write 1 to clear: 1: Interrupt; 0: No interrupt.	0000h

PB port interrupt flag register (R16_PB_INT_IF)

Bit	Name	Access	Description	Reset value
[15:0]	R16_PB_INT_IF	RW1	PB pin interrupt flag bit, write 1 to clear: 1: Interrupt; 0: No interrupt.	0000h

Note: R16_PB_INT_IF[9] corresponds to PB23, and R16_PB_INT_IF[8] corresponds to PB22.

PA port direction configuration register (R32_PA_DIR)

Bit	Name	Access	Description	Reset value
[31:16]	Reserved	RO	Reserved.	0000h
[15:8]	R8_PA_DIR_1	RW	Current input/output direction configure of PA pin: 1: The pin is in output mode; 0: The pin is in input mode.	00h
[7:0]	R8_PA_DIR_0	RW		00h

PA port pin input register (R32_PA_PIN)

Bit	Name	Access	Description	Reset value
[31:16]	Reserved	RO	Reserved.	0000h
[15:8]	R8_PA_PIN_1	RO	Current level status of PA pin (valid only when R32_PA_DIR corresponding bit is 0): 1: Pin input is at high level; 0: Pin input is at low level.	XXh
[7:0]	R8_PA_PIN_0	RO		XXh

PA port data output register (R32_PA_OUT)

Bit	Name	Access	Description	Reset value
[31:16]	Reserved	RO	Reserved.	0000h
[15:8]	R8_PA_OUT_1	RW	When the corresponding bit of direction register R32_PA_DIR is 1: Control PA pin output level status: 1: Output high level; 0: Output low level. When the corresponding bit of direction register R32_PA_DIR is 0: Control PA pin interrupt polarity select: 1: High level/rising edge; 0: Low level/falling edge.	00h
[7:0]	R8_PA_OUT_0	RW		00h

PA port data reset register (R32_PA_CLR)

Bit	Name	Access	Description	Reset value
[31:16]	Reserved	RO	Reserved.	0000h
[15:8]	R8_PA_CLR_1	WZ	PA data register reset control: 1: The corresponding bit data of R32_PA_OUT is cleared to 0; 0: No effect.	00h
[7:0]	R8_PA_CLR_0	WZ		00h

PA port pull-up resistor configuration register (R32_PA_PU)

Bit	Name	Access	Description	Reset value
[31:16]	Reserved	RO	Reserved.	0000h
[15:8]	R8_PA_PU_1	RW	PA pin pull-up resistor enable control: 1: Enable the pull-up resistor; 0: Disable the pull-up resistor.	00h
[7:0]	R8_PA_PU_0	RW		00h

PA port pull-down/drive configuration register (R32_PA_PD_DRV)

Bit	Name	Access	Description	Reset value
[31:16]	Reserved	RO	Reserved.	0000h
[15:8]	R8_PA_PD_DRV_1	RW	When the corresponding bit of direction register R32_PA_DIR is 0: PA pin pull-down resistor enable control: 1: Enable the pull-down resistor; 0: Disable the pull-down resistor. When the corresponding bit of direction register R32_PA_DIR is 1: PA pin current drive capability select: 1: 20mA level; 0: 5mA level.	00h
[7:0]	R8_PA_PD_DRV_0	RW		00h

PB port direction configuration register (R32_PB_DIR)

Bit	Name	Access	Description	Reset value
[31:24]	Reserved	RO	Reserved.	00h
[23:16]	R8_PB_DIR_2	RW	Current input/output direction configure of PB pin: 1: The pin is in output mode; 0: The pin is in input mode.	00h
[15:8]	R8_PB_DIR_1	RW		00h
[7:0]	R8_PB_DIR_0	RW		00h

PB port pin input register (R32_PB_PIN)

Bit	Name	Access	Description	Reset value
[31:24]	Reserved	RO	Reserved.	00h
[23:16]	R8_PB_PIN_2	RO	Current level state of PB pin (only when the corresponding bit of R32_PB_DIR is 0, the bit value is valid): 1: Pin input is at high level; 0: Pin input is at low level.	XXh
[15:8]	R8_PB_PIN_1	RO		XXh
[7:0]	R8_PB_PIN_0	RO		XXh

PB port data output register (R32_PB_OUT)

Bit	Name	Access	Description	Reset value
[31:24]	Reserved	RO	Reserved.	00h
[23:16]	R8_PB_OUT_2	RW	When the corresponding bit of direction register R32_PB_DIR is 1:	00h

			Control PB pin output level status: 1: Output high level; 0: Output low level.	
[15:8]	R8_PB_OUT_1	RW	When the corresponding bit of direction register R32_PB_DIR is 1: Control PB pin output level status: 1: Output high level; 0: Output low level. When the corresponding bit of direction register R32_PB_DIR is 0: Control PB pin interrupt polarity select: 1: High level/rising edge; 0: Low level/falling edge.	00h
[7:0]	R8_PB_OUT_0	RW		00h

PB port data reset register (R32_PB_CLR)

Bit	Name	Access	Description	Reset value
[31:24]	Reserved	RO	Reserved.	00h
[23:16]	R8_PB_CLR_2	WZ	PB data register reset control: 1: The corresponding bit data of R32_PB_OUT is cleared to 0; 0: No effect.	00h
[15:8]	R8_PB_CLR_1	WZ		00h
[7:0]	R8_PB_CLR_0	WZ		00h

PB port pull-up resistor configuration register (R32_PB_PU)

Bit	Name	Access	Description	Reset value
[31:24]	Reserved	RO	Reserved.	00h
[23:16]	R8_PB_PU_2	RW	PB pin pull-up resistor enable control: 1: Enable the pull-up resistor; 0: Disable the pull-up resistor.	00h
[15:8]	R8_PB_PU_1	RW		00h
[7:0]	R8_PB_PU_0	RW		00h

PB port pull-down/drive configuration register (R32_PB_PD_DRV)

Bit	Name	Access	Description	Reset value
[31:24]	Reserved	RO	Reserved.	00h
[23:16]	R8_PB_PD_DRV_2	RW	When the corresponding bit of direction register R32_PB_DIR is 0: PB pin pull-down resistor enable control: 1: Enable the pull-down resistor; 0: Disable the pull-down resistor. When the corresponding bit of direction register R32_PB_DIR is 1: PB pin current drive capability select: 1: 20mA level; 0: 5mA level.	00h
[15:8]	R8_PB_PD_DRV_1	RW		00h
[7:0]	R8_PB_PD_DRV_0	RW		00h

7.5 Mode configuration of GPIO pins

Each GPIO can be configured into 5 modes, as shown in the table below:

Table 7-9 Port Configuration

Mode	R32_Px_DIR	R32_Px_PU	R32_Px_PD_DRV
Floating input/high impedance input/analog input	0	0	0
Input with pull-up resistor	0	1	0
Input with pull-down resistor	0	0	1
Push-pull output, 5mA level drive capability:	1	X	0
Push-pull output, 20mA level drive capability:	1	X	1

Chapter 8 General purpose timer (TMRx)

8.1 Introduction to TMRx

The chip is equipped with 4 26-bit timers, TMR0, TMR1, TMR2 and TMR3, and the longest timing interval is 2^26 clock cycles. It is applicable to various occasions, including measuring the length of input signal pulse (input capture) or generating output waveform (PWM). In addition, TMR1 and TMR2 support DMA function. Each timer is completely independent and can be operated simultaneously.

8.1.1 Main features

- 4 26-bit timers are provided, and the longest timing interval is 2^26 clock cycles.
- Timer interrupt is supported, and among them TMR1 and TMR2 support DMA and interrupt.
- Support capture function to measure input pulse length or cycle.
- The capture function can be set to be capture of level change and hold time of high or low level.
- 26-bit PWM function is supported, which can dynamically adjust the PWM duty cycle setting.

8.2 Register description

Table 8-1 TMR0 registers

Name	Access address	Description	Reset value
R8_TMR0_CTRL_MOD	0x40002000	Mode set register	0x02
R8_TMR0_INTER_EN	0x40002002	Interrupt enable register	0x00
R8_TMR0_INT_FLAG	0x40002006	Interrupt flag register	0x00
R8_TMR0_FIFO_COUNT	0x40002007	FIFO count register	0x0X
R32_TMR0_COUNT	0x40002008	Current count value register	0x0XXXXXXX
R32_TMR0_CNT_END	0x4000200C	Final count value set register	0x0XXXXXXX
R32_TMR0_FIFO	0x40002010	FIFO register	0x0XXXXXXX

Table 8-2 TMR1 registers

Name	Access address	Description	Reset value
R8_TMR1_CTRL_MOD	0x40002400	Mode set register	0x02
R8_TMR1_CTRL_DMA	0x40002401	DMA control register	0x00
R8_TMR1_INTER_EN	0x40002402	Interrupt enable register	0x00
R8_TMR1_INT_FLAG	0x40002406	Interrupt flag register	0x00
R8_TMR1_FIFO_COUNT	0x40002407	FIFO count register	0x0X
R32_TMR1_COUNT	0x40002408	Current count value register	0x0XXXXXXX
R32_TMR1_CNT_END	0x4000240C	Final count value register	0x0XXXXXXX
R32_TMR1_FIFO	0x40002410	FIFO register	0x0XXXXXXX
R16_TMR1_DMA_NOW	0x40002414	Current address of DMA buffer	0x0000XXXX
R16_TMR1_DMA_BEG	0x40002418	Start address of DMA buffer	0x0000XXXX
R16_TMR1_DMA_END	0x4000241C	End address of DMA buffer	0x0000XXXX

Table 8-3 TMR2 registers

Name	Access address	Description	Reset value
R8_TMR2_CTRL_MOD	0x40002800	Mode set register	0x02
R8_TMR2_CTRL_DMA	0x40002801	DMA control register	0x00
R8_TMR2_INTER_EN	0x40002802	Interrupt enable register	0x00

R8_TMR2_INT_FLAG	0x40002806	Interrupt flag register	0x00
R8_TMR2_FIFO_COUNT	0x40002807	FIFO count register	0x0X
R32_TMR2_COUNT	0x40002808	Current count value register	0x0XXXXXXX
R32_TMR2_CNT_END	0x4000280C	Final count value register	0x0XXXXXXX
R32_TMR2_FIFO	0x40002810	FIFO register	0x0XXXXXXX
R16_TMR2_DMA_NOW	0x40002814	Current address of DMA buffer	0x0000XXXX
R16_TMR2_DMA_BEG	0x40002818	Start address of DMA buffer	0x0000XXXX
R16_TMR2_DMA_END	0x4000281C	End address of DMA buffer	0x0000XXXX

Table 8-4 TMR3 registers

Name	Access address	Description	Reset value
R8_TMR3_CTRL_MOD	0x40002C00	Mode set register	0x02
R8_TMR3_INTER_EN	0x40002C02	Interrupt enable register	0x00
R8_TMR3_INT_FLAG	0x40002C06	Interrupt flag register	0x00
R8_TMR3_FIFO_COUNT	0x40002C07	FIFO count register	0x0X
R32_TMR3_COUNT	0x40002C08	Current count value register	0x0XXXXXXX
R32_TMR3_CNT_END	0x40002C0C	Final count value set register	0x0XXXXXXX
R32_TMR3_FIFO	0x40002C10	FIFO register	0x0XXXXXXX

Mode set register (R8_TMRx_CTRL_MOD) (x=0/1/2/3)

Bit	Name	Access	Description	Reset value
[7:6]	RB_TMR_CAP_EDGE	RW	In the capture mode, select the capture trigger mode: 00: Not triggered; 01: Capture the time between any edge changes; 10: Capture the time between falling edges; 11: Capture the time between rising edges. In the count mode, select the edge of count: 00: Not sample count; 01: Count when sampling to any edge; 10: Count when sampling to falling edge; 11: Count when sampling to rising edge.	00b
[7:6]	RB_TMR_PWM_REPEAT	RW	In PWM mode, select the data repetition method: 00: Repeat once; 01: Repeat 4 times; 10: Repeat 8 times; 11: Repeat 16 times.	00b
5	Reserved	RO	Reserved.	0
4	RB_TMR_CAP_COUNT	RW	Sub-mode of RB_TMR_MODE_IN=1 input mode: 1: Count mode; 0: Capture mode.	0
4	RB_TMR_OUT_POLAR	RW	In PWM mode, output polarity set bit: 1: Default at high level, active low; 0: Default at low level, active high;	0
3	RB_TMR_OUT_EN	RW	Timer output enable bit: 1: Output enabled; 0: Output disabled.	0
2	RB_TMR_COUNT_EN	RW	Timer count enable bit:	0

			1: Enable counting; 0: Disable counting.	
1	RB_TMR_ALL_CLEAR	RW	Clear the FIFO/counter/interrupt flag of timer: 1: Force to empty and clear; 0: Not clear.	1
0	RB_TMR_MODE_IN	RW	Timer mode set bit: 1: Input mode (capture mode or count mode); 0: Timing mode or PWM mode.	0

Interrupt enable register (R8_TMRx_INTER_EN) (x=0/1/2/3)

Bit	Name	Access	Description	Reset value
[7:5]	Reserved	RO	Reserved.	000b
4	RB_TMR_IE_FIFO_OV	RW	FIFO overflow (FIFO is full in capture mode or FIFO is empty in PWM mode) interrupt enable bit: 1: Enable interrupt; 0: Disable interrupt.	0
3	RB_TMR_IE_DMA_END	RW	DMA end interrupt enable bit (only TMR1/2 support): 1: Enable interrupt; 0: Disable interrupt.	0
2	RB_TMR_IE_FIFO_HF	RW	FIFO used more than half (FIFO>=4 in capture mode or FIFO<4 in PWM mode) interrupt enable bit: 1: Enable interrupt; 0: Disable interrupt.	0
1	RB_TMR_IE_DATA_ACT	RW	Data activation (In capture mode, it means that every time new data is captured. In PWM mode, it means that value triggers the effective level to end) interrupt enable bit: 1: Enable interrupt; 0: Disable interrupt.	0
0	RB_TMR_IE_CYC_END	RW	Cycle end (it refers to timeout in capture mode, and it refers to the end of cycle in PWM mode and timing mode) interrupt enable bit: 1: Enable interrupt; 0: Disable interrupt.	0

Interrupt flag register (R8_TMRx_INT_FLAG) (x=0/1/2/3)

Bit	Name	Access	Description	Reset value
[7:5]	Reserved	RO	Reserved.	000b
4	RB_TMR_IF_FIFO_OV	RW1	FIFO overflow (FIFO is full in capture mode or FIFO is empty in PWM mode) flag bit, write 1 to clear: 1: Has overflowed; 0: Not overflowed.	0
3	RB_TMR_IF_DMA_END	RW1	DMA completion flag bit, write 1 to clear: 1: Has completed; 0: Not completed.	0
2	RB_TMR_IF_FIFO_HF	RW1	FIFO used more than half (FIFO>=4 in capture mode or FIFO<4 in PWM mode) flag bit, write 1 to clear: 1: FIFO has been used more than half; 0: FIFO has not been used more than half.	0

1	RB_TMR_IF_DATA_ACT	RW1	Data activation (it means that every time new data is captured in capture mode, and it means that value triggers the effective level to end in PWM mode) flag bit, write 1 to clear: 1: Data generated/used; 0: Not generated/not used.	0
0	RB_TMR_IF_CYC_END	RW1	Cycle end (it refers to timeout in capture mode, and it refer to the end of cycle in PWM mode and timing mode) flag bit, write 1 to clear: 1: Timeout/end of cycle; 0: No timeout/ not end.	0

FIFO count register (R8_TMRx_FIFO_COUNT) (x=0/1/2/3)

Bit	Name	Access	Description	Reset value
[7:0]	R8_TMRx_FIFO_COUNT	RO	Data count in FIFO, the maximum value is 8.	0x0X

Current count value register (R32_TMRx_COUNT) (x=0/1/2/3)

Bit	Name	Access	Description	Reset value
[31:0]	R32_TMRx_COUNT	RO	Current count value of counter.	0XXXXXXXh

Final count value set register (R32_TMRx_CNT_END) (x=0/1/2/3)

Bit	Name	Access	Description	Reset value
[31:0]	R32_TMRx_CNT_END	RW	In timer mode, the number of clocks in a timing cycle; In PWM mode, the total number of clocks in a PWM cycle; Capture the number of timeout clocks in capture mode. Only the lower 26 bits are valid, and the maximum value is 67108863. In counting mode, final count value -2 (overflow) Note: With write operation on this register, the value of R32_TMRx_COUNT will be automatically cleared to 0.	0XXXXXXXh

FIFO register (R32_TMRx_FIFO) (x=0/1/2/3)

Bit	Name	Access	Description	Reset value
[31:0]	R32_TMRx_FIFO	RO/ WO	FIFO data register, only the lower 26 bits are valid.	0XXXXXXXh

DMA control register (R8_TMRx_CTRL_DMA) (x=1/2) (only TMR1/2 support)

Bit	Name	Access	Description	Reset value
[7:3]	Reserved	RO	Reserved.	00000b

2	RB_TMR_DMA_LOOP	RW	DMA address loop enable bit: 1: Enable address loop; 0: Disable address loop. If the DMA address loop is enabled, when the DMA address is added to the set end address, it will automatically loop to the start address set.	0
1	Reserved	RO	Reserved.	0
0	RB_TMR_DMA_ENABLE	RW	DMA function enable bit: 1: Enable DMA; 0: Disable DMA.	0

DMA current buffer address (R16_TMRx_DMA_NOW) (x=1/2)

Bit	Name	Access	Description	Reset value
[15:0]	R16_TMRx_DMA_NOW	RO	Current address of DMA data buffer. It can be used to calculate the number of conversions, and the calculation method is: COUNT=(TMR_DMA_NOW-TMR_DMA_BEG)/4.	XXXXh

DMA start buffer address (R16_TMRx_DMA_BEG) (x=1/2)

Bit	Name	Access	Description	Reset value
[15:0]	R16_TMRx_DMA_BEG	RW	The start address of DMA data buffer, only the lower 14 bits are valid, and the address must be 4 bytes aligned.	XXXXh

DMA end buffer address (16_TMRx_DMA_END) (x=1/2)

Bit	Name	Access	Description	Reset value
[15:0]	R16_TMRx_DMA_END	RW	The end address of DMA data buffer (not included), only the lower 14 bits are valid, and the address must be 4 bytes aligned.	XXXXh

8.3 Functional description and configuration

8.3.1 Timing and counting functions

Each timer of the chip supports the longest time interval of 2^26 clock cycles and performs an incremental count mode. If the system clock cycle is 32MHz, the longest time interval is: 31.25nS*2^26≈2S. Each timer has an independent interrupt.

The operation steps for timing function are as follows:

(1) Set RB_TMR_ALL_CLEAR, clear R32_TMRx_COUNT and interrupt flag, etc.

(2) Set the R32_TMRx_CNT_END register to the time value that needs timing;
Time = Tsys *R32_TMRx_CNT_END;

(3) Clear RB_TMR_ALL_CLEAR, clear the timing mode corresponding to RB_TMR_MODE_IN;

(4) Optional steps, set the R8_TMRx_INTER_EN register, set RB_TMR_IE_CYC_END to open the timing cycle interrupt;

(5) Set the RB_TMR_COUNT_EN in the R8_TMRx_CTRL_MOD register, and start the timer counting;

(6) When count value of R32_TMRx_COUNT is equal to that of R32_TMRx_CNT_END, the timing is completed. In this case, RB_TMR_IF_CYC_END in R8_TMRx_INT_FLAG is set to 1, which can be cleared by writing 1.

The operation steps for counting function are as follows:
(1) Set the corresponding I/O pin direction of counting as input;
(2) Set the count overflow final value in R32_TMRx_CNT_END;
(3) Configure R8_TMRx_CTRL_MOD, set the corresponding count mode of RB_TMR_MODE_IN and RM_TMR_CAP_COUNT, clear RB_TMR_ALL_CLEAR, select sample edge method by RB_TMR_CAP_EDGE, set RB_TMR_COUNT_EN in R8_TMRx_CTRL_MOD to 1, enable counting function;
(4) Optional step, set the corresponding interrupt enable register bit if it is needed to enable interrupt;
(5) Save current count value in R32_TMRx_COUNT. Every time the count value reaches final count value, RB_TMR_IE_CYC_END will be set to 1 and R32_TMRx_COUNT will be cleared to 0. Hardware interrupt is triggered if enabling interrupt.

8.3.2 PWM function

Each timer of the chip has PWM function. The PWM functions of TMR1 and TMR2 support DMA data loading. The default output polarity of PWM can be set to high level or low level. The repeated output times of the same data can be selected as 1, 4, 8 or 16. This repeat function is combined with DMA to simulate the effect of DAC. The shortest time unit for PWM to output valid level is 1 system clock cycle, and the duty cycle of PWM can be dynamically modified to simulate special waveforms.

PWM operation steps are as follows:
(1) Set RB_TMR_ALL_CLEAR, empty and clear R32_TMRx_FIFO and interrupt flags, etc.
(2) Set the PWM total cycle register R32_TMRx_CNT_END, the value shall not be less than the value in R32_TMRx_FIFO register;
(3) Configure R8_TMRx_CTRL_MOD, clear RB_TMR_ALL_CLEAR, clear PWM mode corresponding to RB_TMR_MODE_IN, select the output polarity through RB_TMR_OUT_POLAR, and select the repetition times of the same data through RB_TMR_PWM_REPEAT as needed;
(4) Set the data register R32_TMRx_FIFO, the minimum value is 0, with the corresponding duty cycle of 0%; the maximum value is the same as that of R32_TMR_CNT_END, with the corresponding duty cycle of 100%; the calculation of duty cycle: R32_TMRx_FIFO/R32_TMRx_CNT_END. TMR1 and TMR2 can load continuous dynamic data through DMA, and simulate special waveforms combined with the repeated output times of the same data;
(5) Configure R8_TMRx_CTRL_MOD, set RB_TMR_COUNT_EN to start counting and RB_TMR_OUT_EN to allow PWM output;
(6) Set the I/O pin corresponding to PWM as output;
(7) Optional step: If it is needed to enable interrupts, set the corresponding interrupt enable register bit;
(8) After one PWM cycle is completed, if an interrupt is enabled, the hardware interrupt will be triggered after RB_TMR_IF_DATA_ACT or RB_TMR_IF_CYC_END is set;
(9) The duty cycle of PWM can be dynamically changed by updating the data in R32_TMRx_FIFO. It is recommended to load it through DMA.

For example: Set the RB_TMR_OUT_POLAR bit to 0, R32_TMRx_FIFO to 6, R32_TMRx_CNT_END to 18, the basic timing diagram of PWM generation is as follows, and its duty cycle is:
R32_TMRx_FIFO/R32_TMRx_CNT_END = 1/3

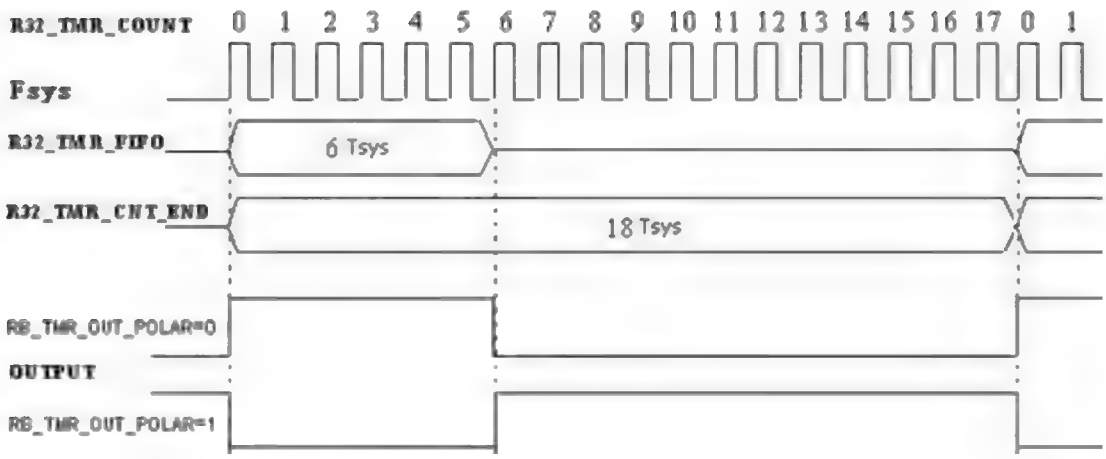

Figure 8-1 PWM output timing diagram

If RB_TMR_PWM_REPEAT is set to 00, it means that the above process is repeated once, 01 means repeating 4 times, 10 means that repeating 8 times, and 11 means repeating 16 times. After repeating, load the next data in FIFO and then continue.

8.3.3 Capture function

Each timer of chip has a capture function, among which the capture functions of TMR1 and TMR2 support DMA data storage. 3 capture modes can be selected: start from any edge trigger and end at any edge trigger, start from rising edge trigger and end at rising edge trigger, and start from falling edge trigger and end at falling edge trigger. The following table shows the description of capture trigger mode:

Table 8-5 Description of capture trigger mode

Capture mode select bit RB_TMR_CATCH_EDGE	Trigger Mode	Icon
00	Not capture	None
01	Edge trigger edge to edge	
10	Falling edge to falling edge	
11	Rising edge to rising edge	

There are 2 trigger states in edge trigger mode, which can capture high level width or low-level width. When the highest bit (bit 25) of the valid data in data register R32_TMRx_FIFO is 1, high level is captured; when it is 0, low level is captured. If the bit 25 of consecutive sets of data is 1 (or 0), the width of the high (or low) level exceeds the timeout value, and needs to be combined and accumulated.

In the trigger modes from falling edge to falling edge and from rising edge to rising edge, an input change cycle can be captured. When the highest bit (bit 25) of the valid data in data register R32_TMRx_FIFO is 0, one cycle is normally sampled; when it is 1, the input change period exceeds the timeout value R32_TMRx_CNT_END, and the latter set of data needs to be added and accumulated as a single input change period.

The specific description is shown in the figure below:

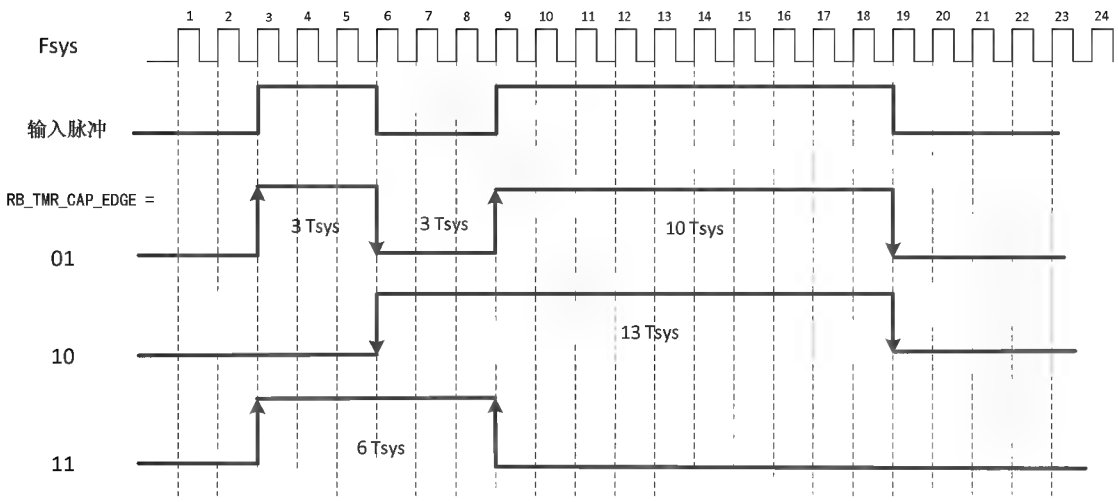

Figure 8-2 Count the capture cycle with system clock

As shown in the figure above, sample once in each clock cycle:
When RB_TMR_CATCH_EDGE=01b, sampling is set to the mode of edge trigger, and the time width sampled is 3, 3, 10;
When RB_TMR_CATCH_EDGE=10b, sampling is set to the mode of falling edge to falling edge, and the time width sampled is 13;
When RB_TMR_CATCH_EDGE=11b, sampling is set to the mode of rising edge to rising edge, and the time width sampled is 6;

Operation steps for capture mode:
(1) Set RB_TMR_ALL_CLEAR, empty and clear R32_TMRx_FIFO and interrupt flags, etc.
(2) Set the direction of the I/O pin corresponding to capture as input;
(3) Set a reasonable capture timeout time in R32_TMRx_CNT_END, which can be used to generate a timeout interrupt when the input signal remains unchanged for a long time, and generate timeout data after the input signal does not change overtime (bit 25 of data is 1, and the lower 25 bits can be accumulated backward);
(4) Configure R8_TMRx_CTRL_MOD, set the capture mode corresponding to RB_TMR_MODE_IN, select the edge mode of capture through RB_TMR_CAP_EDGE, set RB_TMR_COUNT_EN of R8_TMRx_CTRL_MOD as 1, and enable counting;
(5) Optional step: If it is needed to enable interrupts, set the corresponding interrupt enable register bit;
(6) To save the captured data via DMA, you need to set the register R16_TMRx_DMA_BEG as the first address of buffer which stores the data captured, set the register R16_TMRx_DMA_END as the end address of buffer which stores the data captured (not included), and set the RB_TMR_DMA_ENABLE of R8_TMRx_CTRL_DMA as 1, and enable DMA function;
(7) Clear RB_TMR_ALL_CLEAR of R8_TMRx_CTRL_MOD, and start the capture function;
(8) Every time data is captured, RB_TMR_IF_DATA_ACT will be set as 1; if the interrupt is enabled, a hardware interrupt will be triggered; the captured data is stored in R32_TMRx_FIFO by default; if DMA is enabled, the captured data will be automatically stored in the data buffer set by DMA.

Chapter 9 Universal asynchronous receiver-transmitter (UART)

9.1 Introduction to UART

The chip provides 4 sets of full-duplex asynchronous serial ports, UART0/1/2/3. Full-duplex and half-duplex serial communication are supported. Among them, UART0 provides the transmit status pin for switching RS485, and supports MODEM signals CTS, DSR, DTR and RTS.

9.1.1 Main features

- Compatible with 16C550 asynchronous serial port and enhanced.
- 5/6/7/8 data bits, 1/2 stop bits.
- Support the verification modes of odd, even, no parity, blank 0 and flag 1, etc.
- Programmable communication baud rate, up to 6Mbps.
- Built-in 8-byte FIFO buffer, support 4 FIFO trigger stages.
- UART0 supports MODEM signals CTS, DSR, DTR and RTS.
- UART0 supports automatic handshake and automatic transmission rate control of hardware flow control signals CTS and RTS, compatible with TL16C550C.
- Support serial frame error detection and Break circuit interval detection.
- Full-duplex and half-duplex serial communication are supported, and UART0 provides the transmission status pin for switching RS485.

9.2 Register description

Table 9-1 UART0 registers

Name	Access address	Description	Reset value
R8_UART0_MCR	0x40003000	MODEM control register	0x00
R8_UART0_IER	0x40003001	Interrupt enable register	0x00
R8_UART0_FCR	0x40003002	FIFO control register	0x00
R8_UART0_LCR	0x40003003	Line control register	0x00
R8_UART0_IIR	0x40003004	Interrupt identification register	0x01
R8_UART0_LSR	0x40003005	Line status register	0x60
R8_UART0_MSR	0x40003006	MODEM status register	0xX0
R8_UART0_RBR	0x40003008	Receive buffer register	0xXX
R8_UART0_THR	0x40003008	Transmit hold register	0xXX
R8_UART0_RFC	0x4000300A	Receive FIFO count register	0x00
R8_UART0_TFC	0x4000300B	Transmit FIFO count register	0x00
R16_UART0_DL	0x4000300C	Baud rate divisor latch	0xXX
R8_UART0_DIV	0x4000300E	Prescaler divisor register	0xXX
R8_UART0_ADR	0x4000300F	Slave address register	0xFF

Table 9-2 UART1 registers

Name	Access address	Description	Reset value
R8_UART1_MCR	0x40003400	MODEM control register	0x00
R8_UART1_IER	0x40003401	Interrupt enable register	0x00
R8_UART1_FCR	0x40003402	FIFO control register	0x00
R8_UART1_LCR	0x40003403	Line control register	0x00
R8_UART1_IIR	0x40003404	Interrupt identification register	0x01

R8_UART1_LSR	0x40003405	Line status register	0x60
R8_UART1_RBR	0x40003408	Receive buffer register	0xXX
R8_UART1_THR	0x40003408	Transmit hold register	0xXX
R8_UART1_RFC	0x4000340A	Receive FIFO count register	0x00
R8_UART1_TFC	0x4000340B	Transmit FIFO count register	0x00
R16_UART1_DL	0x4000340C	Baud rate divisor latch	0xXX
R8_UART1_DIV	0x4000340E	Prescaler divisor register	0xXX

Table 9-3 UART2 registers

Name	Access address	Description	Reset value
R8_UART2_MCR	0x40003800	MODEM control register	0x00
R8_UART2_IER	0x40003801	Interrupt enable register	0x00
R8_UART2_FCR	0x40003802	FIFO control register	0x00
R8_UART2_LCR	0x40003803	Line control register	0x00
R8_UART2_IIR	0x40003804	Interrupt identification register	0x01
R8_UART2_LSR	0x40003805	Line status register	0x60
R8_UART2_RBR	0x40003808	Receive buffer register	0xXX
R8_UART2_THR	0x40003808	Transmit hold register	0xXX
R8_UART2_RFC	0x4000380A	Receive FIFO count register	0x00
R8_UART2_TFC	0x4000380B	Transmit FIFO count register	0x00
R16_UART2_DL	0x4000380C	Baud rate divisor latch	0xXX
R8_UART2_DIV	0x4000380E	Prescaler divisor register	0xXX

Table 9-4 UART3 registers

Name	Access address	Description	Reset value
R8_UART3_MCR	0x40003C00	MODEM control register	0x00
R8_UART3_IER	0x40003C01	Interrupt enabling register	0x00
R8_UART3_FCR	0x40003C02	FIFO control register	0x00
R8_UART3_LCR	0x40003C03	Line control register	0x00
R8_UART3_IIR	0x40003C04	Interrupt identification register	0x01
R8_UART3_LSR	0x40003C05	Line status register	0x60
R8_UART3_RBR	0x40003C08	Receive buffer register	0xXX
R8_UART3_THR	0x40003C08	Transmit hold register	0xXX
R8_UART3_RFC	0x40003C0A	Receive FIFO count register	0x00
R8_UART3_TFC	0x40003C0B	Transmit FIFO count register	0x00
R16_UART3_DL	0x40003C0C	Baud rate divisor latch	0xXX
R8_UART3_DIV	0x40003C0E	Prescaler divisor register	0xXX

MODEM control register (R8_UARTx_MCR) (x=0/1/2/3)

Bit	Name	Access	Description	Reset value
7	RB_MCR_HALF	RW	Half-duplex transceiver mode control (only supported by UART0): 1: Enter half-duplex transceiver mode, transmit with priority, and receive when not transmitting; 0: Disable half-duplex mode.	0
6	RB_MCR_TNOW	RW	Status enable that DTR pin output is being	0

			transmitted (only supported by UART0): 1: Output the indication status of being transmitted to DTR pin, used to control the reception and transmission switch of RS485; 0: DTR pin is in normal function.	
5	RB_MCR_AU_FLOW_EN	RW	CTS and RTS hardware automatic flow control enable (only supported by UART0): 1: Enable CTS and RTS hardware automatic flow control; 0: Disable CTS and RTS hardware automatic flow control; In the flow control mode, if this bit is 1, then the serial port will continue to send the next data only when it detects that the CTS pin input is valid (active low). Otherwise, the serial port transmission will be suspended, and the CTS input status change will not generate the MODEM status interrupt when this bit is 1. If this bit is 1 and RTS is 1, the serial port will automatically validate the RTS pin (active low) when receiver FIFO is empty. The serial port will automatically invalidate the RTS pin when the number of received bytes reaches the trigger point of FIFO and will re-validate the RTS pin when the receiver FIFO is empty. Hardware automatic flow control can be used to connect your own CTS pin to the other party's RTS pin and transmit your own RTS pin to the other party's CTS pin.	0
4	RB_MCR_LOOP	RW	The test mode of internal loop enable (only supported by UART0): 1: Enable the test mode of internal loop; 0: Disable the test mode of internal loop. In the test mode of the internal loop, all external output pins of the serial port are invalid, TXD internally returns to RXD, RTS internally returns to CTS, DTR internally returns to DSR, OUT1 internally returns to RI and OUT2 internally returns to DCD.	0
3	RB_MCR_OUT2 RB_MCR_INT_OE	RW	UART interrupt request output control bit: 1: Enable to send request; 0: Disable.	0
2	RB_MCR_OUT1	RW	User-defined MODEM control bit (only supported by UART0), and no actual output pin is connected: 1: Set high; 0: Set low.	0
1	RB_MCR_RTS	RW	RTS signal output level control (only supported by UART0): 1: RTS signal output is valid (low level);	0

			0: RTS signal output high level (default).	
0	RB_MCR_DTR	RW	DTR signal output level control (only supported by UART0): 1: DTR signal output is valid (low level); 0: DTR signal output high level (default).	0

Interrupt enable register (R8_UARTx_IER) (x=0/1/2/3)

Bit	Name	Access	Description	Reset value
7	RB_IER_RESET	WZ	UART software reset control bit, automatically cleared: 1: Software resets UART; 0: Normal operation.	0
6	RB_IER_TXD_EN	RW	UART TXD pin output enable bit: 1: Enable pin output; 0: Disable pin output.	0
5	RB_IER_RTS_EN	RW	RTS pin output enable bit (only supported by UART0): 1: Enable output; 0: Disable output.	0
4	RB_IER_DTR_EN	RW	DTR pin output enable bit (only supported by UART0): 1: Enable output; 0: Disable output.	0
3	RB_IER_MODEM_CHG	RW	Modem input status change interrupt enable bit (only supported by UART0): 1: Enable interrupt; 0: Disable interrupt.	0
2	RB_IER_LINE_STAT	RW	Receive line status interrupt enable bit: 1: Enable interrupt; 0: Disable interrupt.	0
1	RB_IER_THR_EMPTY	RW	Transmit hold register empty interrupt enable bit: 1: Enable interrupt; 0: Disable interrupt.	0
0	RB_IER_RECV_RDY	RW	Receive data interrupt enable bit: 1: Enable interrupt; 0: Disable interrupt.	0

FIFO control register (R8_UARTx_FCR) (x=0/1/2/3)

Bit	Name	Access	Description	Reset value
[7:6]	RB_FCR_FIFO_TRIG	RW	Trigger points select of receiving FIFO interrupt and hardware flow control: 00: 1 byte; 01: 2 bytes; 10: 4 bytes; 11: 7 bytes. Used to set the trigger points of receiving FIFO interrupt and hardware flow control. For example: 10 corresponds to 4 bytes, that is, interrupt available for receiving data is generated when 4 bytes are received, and RTS pin is automatically invalidated when hardware flow control is enabled.	00b
[5:3]	Reserved	RO	Reserved.	000b
2	RB_FCR_TX_FIFO_CLR	WZ	Transmit FIFO data clear enable bit, and	0

			automatically cleared: 1: Clear the data of transmitter FIFO (excluding TSR); 0: Not clear the data of transmitter FIFO.	
1	RB_FCR_RX_FIFO_CLR	WZ	Receive FIFO data clear enable bit, and automatically cleared: 1: Clear the data of receiver FIFO (excluding RSR); 0: Not clear the data of receiver FIFO.	0
0	RB_FCR_FIFO_EN	RW	FIFO enable bit: 1: Enable 8-byte FIFO; 0: Disable FIFO. After disabling FIFO, it is 16C450 compatible mode, which means that there is only one byte in FIFO (RECV_TG1=0, RECV_TG0=0, FIFO_EN=1), and it is recommended to enable.	0

Line control register (R8_UARTx_LCR) (x=0/1/2/3)

Bit	Name	Access	Description	Reset value
7	RB_LCR_DLAB RB_LCR_GP_BIT	RW	UART general purpose bit, user-defined.	0
6	RB_LCR_BREAK_EN	RW	Force to generate BREAK line interval enable bit: 1: Forced to generate; 0: Not generat.	0
[5:4]	RB_LCR_PAR_MOD	RW	Parity bit format selection: 00: Odd parity check; 01: Even parity check; 10: Flag bit (MARK, set to 1); 11: Blank bit (SPACE, cleared). Valid only when RB_LCR_PAR_EN bit is 1.	00b
3	RB_LCR_PAR_EN	RW	Parity bit enable bit: 1: Allow to generate parity bit when sending and check parity bit when receiving; 0: No parity bit.	0
2	RB_LCR_STOP_BIT	RW	Stop bit format set bit: 0: 1 stop bit; 1: 2 stop bits.	0
[1:0]	RB_LCR_WORD_SZ	RW	UART data length selection: 00: 5 data bits; 01: 6 data bits; 10: 7 data bits; 11: 8 data bits.	00b

Interrupt identification register (R8_UARTx_IIR) (x=0/1/2/3)

Bit	Name	Access	Description	Reset value
[7:6]	RB_IIR_FIFO_ID	RO	UART FIFO enable status bit: 11: FIFO has been enabled; 00: FIFO is not enabled.	00b

[5:4]	Reserved	RO	Reserved.	00b
[3:0]	RB_IIR_INT_MASK	RO	Interrupt flag: If the RB_IIR_NO_INT bit is 0, an interrupt is generated, and it is needed to judge the interrupt source after reading. Please refer to Table 9-5 for details.	0000b
0	RB_IIR_NO_INT	RO	UART no interrupt flag bit: 1: No interrupt; 0: Interrupt.	1

The meanings of bit RB_IIR_NO_INT of interrupt identification register R8_UARTx_IIR and each bit of RB_IIR_INT_MASK are shown in the following table:

Table 9-5 Meaning of RB_IIR_INT_MASK in IIR register

IIR register bit				Priority	Interrupt Type	Interrupt source	Means of clearing interrupts
IID3	IID2	IID1	NOINT				
0	0	0	1	None	No interrupt	No interrupt	
1	1	1	0	0	Bus address matching	The received one data is the UART bus address, and the address matches the preset slave value or the broadcast address. (Only supported by UART0):	Read IIR or disable multi-device mode
0	1	1	0	1	Receive line status	OVER_ERR, PAR_ERR, FRAM_ERR, BREAK_ERR	Read LSR
0	1	0	0	2	Receive data available	The number of bytes received reaches the trigger point of FIFO.	Read RBR
1	1	0	0	2	Receive data timeout	The next data is not received for more than 4 data periods.	Read RBR
0	0	1	0	3	THR register empty	Transmit hold register is empty, or RB_IER_THR_EMPTY bit is changed from 0 to 1 and triggered.	Read IIR or write THR
0	0	0	0	4	MODEM input change	Triggered by setting △ CTS, △ DSR, △ RI and △ DCD to 1.	Read MSR

Line status register (R8_UARTx_LSR) (x=0/1/2/3)

Bit	Name	Access	Description	Reset value
7	RB_LSR_ERR_RX_FIFO	RO	Receive FIFO error flag bit: 1: At least one PAR_ERR or FRAM_ERR or BREAK_ERR error in the receiver FIFO; 0: No error in receiver FIFO.	0
6	RB_LSR_TX_ALL_EMP	RO	Transmit hold register THR and transmit shift register TSR empty flag bit. 1: Both are empty; 0: Both are not empty.	1
5	RB_LSR_TX_FIFO_EMP	RO	Transmit FIFO empty flag bit: 1: Transmit FIFO is empty; 0: Transmit FIFO is not empty.	1
4	RB_LSR_BREAK_ERR	RZ	BREAK line interval detection flag bit: 1: BREAK is detected; 0: BREAK is not detected.	0

3	RB_LSR_FRAME_ERR	RZ	Data frame error flag bit: 1: Frame error in the data being read from the receiver FIFO, and a valid stop bit is missing. 0: No error in the currently read data frame.	0
2	RB_LSR_PAR_ERR	RZ	Receive data Parity error flag bit: 1: Parity error in the data being read from the receiver FIFO. 0: The currently read data parity is correct.	0
1	RB_LSR_OVER_ERR	RZ	Receiver FIFO buffer overflow flag bit: 1: Has overflowed; 0: Not overflowed.	0
0	RB_LSR_DATA_RDY	RO	Data flag bit received in the receiver FIFO: 1: Data in FIFO; 0: No data. After reading all the data in the FIFO, this bit will be automatically cleared.	0

MODEM status register (R8_UART0_MSR) (only supported by UART0)

Bit	Name	Access	Description	Reset value
7	RB_MSR_DCD	RO	DCD status bit (only internal loop test, no pin): 1: DCD is active (low level); 0: DCD is inactive (high level);	0
6	RB_MSR_RI	RO	RI status bit (only internal loop test, no pin): 1: RI is active (low level); 0: RI is inactive (high level);	0
5	RB_MSR_DSR	RO	DSR pin status bit: 1: DSR pin is active (low level); 0: DSR pin is inactive (high level).	X
4	RB_MSR_CTS	RO	CTS pin status bit: 1: CTS pin is active (low level); 0: CTS pin is inactive (high level).	X
3	RB_MSR_DCD_CHG	RZ	DCD input status change flag bit: 1: Has changed; 0: No change.	0
2	RB_MSR_RI_CHG	RZ	RI input status change flag bit: 1: Has changed; 0: No change.	0
1	RB_MSR_DSR_CHG	RZ	DSR pin input status change flag bit: 1: Has changed; 0: No change.	0
0	RB_MSR_CTS_CHG	RZ	CTS pin input status change flag bit: 1: Has changed; 0: No change.	0

Receive buffer register (R8_UARTx_RBR) (x=0/1/2/3)

Bit	Name	Access	Description	Reset value
[7:0]	R8_UARTx_RBR	RO	Data receive buffer register. If the DATA_RDY bit of LSR is 1, the received data can be read from this register; If FIFO_EN is 1, the data received from UART shift register RSR will be firstly stored	XXh

			in the receiver FIFO, and then read out through the register.	

Transmit hold register (R8_UARTx_THR) (x=0/1/2/3)

Bit	Name	Access	Description	Reset value
[7:0]	R8_UARTx_THR	WO	Transmit hold register. Transmitter FIFO is included, used to write the data to be transmitted; if FIFO_EN is 1, the written data will be firstly stored in the transmitter FIFO, and then output one by one through the transmit shift register TSR.	XXh

Receive FIFO count register (R8_UARTx_RFC) (x=0/1/2/3)

Bit	Name	Access	Description	Reset value
[7:0]	R8_UARTx_RFC	RO	Data count in the current receiver FIFO.	00h

Transmit FIFO count register (R8_UARTx_TFC) (x=0/1/2/3)

Bit	Name	Access	Description	Reset value
[7:0]	R8_UARTx_TFC	RO	Data count in the current transmitter FIFO.	00h

Baud rate divisor latch (R16_UARTx_DL) (x=0/1/2/3)

Bit	Name	Access	Description	Reset value
[15:0]	R16_UARTx_DL	RW	The 16-bit divisor is used to calculate the baud rate. Formula: Divisor = the serial internal reference clock Fuart / 16 / the required communication baud rate. For example: If the serial internal reference clock Fuart is 1.8432MHz and the required baud rate is 9600bps, then the divisor =1843200/16/9600=12.	XXXXh

Prescaler divisor register (R8_UARTx_DIV) (x=0/1/2/3)

Bit	Name	Access	Description	Reset value
[7:0]	R8_UARTx_DIV	RW	It is used to calculate the internal reference clock of UART, the lower 7 bits are valid. Formula: Divisor = Fsys*2 / internal reference clock of UART, the maximum value is 127.	XXh

Slave address register (R8_UART0_ADR) (only supported by UART0)

Bit	Name	Access	Description	Reset value
[7:0]	R8_UART0_ADR	RW	Slave address of UART0 during multi-device communication: FFh: Not used; Others: Slave address.	0FFh

R8_UART0_ADR presets the address when this device acts as a slave, it is used to automatically compare the received addresses during multi-device communication, and generate an interrupt when the address matches or when the broadcast address 0FFH is received. Meanwhile, it is allowed to receive subsequent data packets. Data is not received until the address matches. After it starts sending data or rewriting the R8_UART0_ADR register, stop receiving any data, until the address matches again next time or the broadcast address is received.

When R8_UART0_ADR is 0FFH or RB_LCR_PAR_EN=0, the automatic comparison function of bus address is disabled.

When R8_UART0_ADR is not 0FFH and RB_LCR_PAR_EN=1, the automatic comparison function of bus address is enabled, and the following parameters should be configured: RB_LCR_WORD_SZ is 11b to select method of 8 data bits. For the case when the address byte is MARK (that is, the bit 9 of data byte is 0), RB_LCR_PAR_MOD should be set to 10b. For the case when the address byte is SPACE (that is, the bit 9 of data byte is 1), RB_LCR_PAR_MOD should be set to 11b.

9.3 Functional description and configuration

UART0/1/2/3 output pins are all at 3.3V LVCMOS level. The pins in asynchronous serial port mode include: data transmission pins and MODEM contact signal pins (only supported by UART0). Data transmission pins include: TXD pin and RXD pin, both of which are at high level by default. MODEM contact signal pins include: CTS pin, DSR pin, DTR pin, RTS pin, all of which are at high level by default. All these MODEM contact signals can be used as general-purpose I/O pins, and the application program controls them and define their purposes.

4 sets of UARTs have built-in independent transceiver buffers and 8-byte FIFOs, support simplex, half-duplex or full-duplex UART communication. Serial data includes 1 low-level start bit, 5/6/7/8 data bits, 0/1 additional check bit or flag bit, 1/2 high-level stop bits, and supports odd/even/mark/blank checking. The baud rate error of the serial port transmitting signal is less than 0.5%, and the allowable baud rate error of the serial port receiving signal is not more than 2%.

9.3.1 Baud rate calculation

1) Calculate the internal reference clock Fuart of serial port, set the R8_UARTx_DIV register, the maximum value is 127, and usually 1 is written.

2) Calculate the baud rate and set R16_UARTx_DL register.
   Baud rate = Fsys * 2 / R8_UARTx_DIV / 16 / R16_UARTx_DL.

9.3.2 UART transmission

"THR register empty" interrupt UART_II_THR_EMPTY sent by UART means that the current transmitter FIFO is empty. The interrupt is cleared when the IIR register is read, or cleared when the next data is written to THR. If only one byte is written to THR, it will soon generate again a request to send THR register empty interrupt as the byte is quickly transferred to the transmitter shift register (TSR) to start transmitting. At this

point, the next data ready to be transmitted can be written. After all the data in TSR register is removed, UART transmission is completed. At this time, RB_LSR_TX_ALL_EMP bit of LSR register becomes active at 1.

In interrupt trigger mode, when THR empty interrupt from UART is reveived, if FIFO is enabled, up to 8 bytes can be written to THR and FIFO at a time, and they will be transmitted automatically by the controller in sequence; if FIFO is disabled, only one byte can be written at a time. If no data needs to be transmitted, exit directly (the interrupts have been automatically cleared when IIR is read before).

In query mode, RB_LSR_TX_FIFO_EMP bit of LSR judges whether the transmitter FIFO is empty or not. When this bit is 1, the data can be written to THR and FIFO. If FIFO is enabled, up to 8 bytes can be written at a time.

R8_UARTx_TFC register can also be read to determine the amount of remaining data to be sent in the current FIFO. If it is not equal to 8, continue to write the data to be sent into the FIFO, that can save filling time.

9.3.3 UART reception

UART receive data available interrupt UART_II_RECV_RDY means that the number of existing data bytes in the receiver FIFO has reached or exceeded the FIFO trigger points set and selected by RB_FCR_FIFO_TRIG of FCR. The interrupt is cleared when the data is read from RBR to cause the number of bytes in the FIFO less than that of the FIFO trigger points.

UART receive data timeout interrupt UART_II_RECV_TOUT means that there is at least one byte of data in the receiver FIFO, and the waiting time is equivalent to the time of receiving 4 datas starting from the last time when UART receives data and the last time when the system takes the data. The interrupt is cleared when a new data is received again or after the MCU reads RBR once. When receiver FIFO is empty, RB_LSR_DATA_RDY bit of LSR is 0; when there is data in the receiver FIFO, it is valid when RB_LSR_DATA_RDY bit is 1.

In the interrupt trigger mode, R8_UARTx_RFC register can be read to query the remaining data count in the current FIFO after receiving UART receive data timeout interrupt, and read all the data directly, or continuously query the RB_LSR_DATA_RDY of LSR. If this bit is valid, read the data until this bit becomes invalid. After receiving UART receive data available interrupt, read the data for the number of bytes set by RB_FCR_FIFO_TRIG from RBR at one time, or read all the data in the current FIFO according to the RB_LSR_DATA_RDY bit and the R8_UARTx_RFC register.

In query mode, whether the receiver FIFO is empty can be judged according to the RB_LSR_DATA_RDY bit of LSR, or read the R8_UARTx_RFC register to get the data count in the current FIFO and get all the data received by UART.

9.3.4 Hardware flow control

Hardware flow control includes automatic CTS (RB_MCR_AU_FLOW_EN is set to 1) and automatic RTS (RB_MCR_AU_FLOW_EN and RB_MCR_RTS are both set to 1).

If automatic CTS is enabled, CTS pin must be valid before UART sends data. The serial port transmitter detects CTS pin before sending the next data. When CTS pin state is valid, the transmitter sends the next data. In order to ensure that the transmitter stops sending the later data, CTS pin must be disabled before the middle time of the last stop bit currently being sent. The automatic CTS function reduces the interrupt applied to the system. When hardware flow control is enabled, a change in CTS pin level does not trigger a MODEM interrupt as the controller automatically controls the transmitter based on CTS pin status. If automatic RTS is enabled, RTS pin output will be valid only when there is enough space in FIFO to receive

data, and RTS pin output is invalid when the receiver FIFO is full. RTS pin output will be valid if all the data in the receiver FIFO is taken or cleared. When the trigger point of the receiver FIFO is reached (the number of existing bytes in the receiver FIFO is not less than the number of bytes set by RB_FCR_FIFO_TRIG of FCR), RTS pin output is invalid, and the other transmitter is allowed to send another data after RTS pin is invalid. Once the data in the receiver FIFO is emptied, RTS pin will be automatically re-enabled, so that the other transmitter resumes transmission. If both automatic CTS and automatic RTS are enabled (both RB_MCR_AU_FLOW_EN and RB_MCR_RTS of MCR register are 1), when its own RTS pin is connected to the other CTS pin, one side will not send data unless there is enough space in the receiver FIFO of the other side. Therefore, with hardware flow control, FIFO overflow and timeout errors during serial port reception can be avoided.

Chapter 10 Serial peripheral interface (SPI)

10.1 Introduction to SPI

SPI is a full-duplex serial interface with a host and several slaves connected to the bus, and only a pair of host and slave is communicating at the same time. Usually, SPI interface consists of 4 pins: SPI chip select pin (SCS), SPI clock pin SCK, SPI serial data pin MISO (master input/slave output pin) and SPI serial data pin MOSI (master output/slave input pin).

10.1.1 Main features

The chip provides the SPI interface with the following features:

- Master mode and slave mode.
- Compatible with Serial Peripheral Interface (SPI) specification.
- Data transmission modes: mode0 and mode3.
- 8-bit data transmission mode, optional data bit sequence: low bits of a byte are in front or high bits are in front.
- Clock frequency can be up to half of the system clock frequency Fsys.
- 8-byte FIFO.
- The slave mode supports the first byte as command mode or data stream mode.
- DMA is supported, for higher data transmission efficiency.

10.2 Register description

Table 10-1 SPI0 registers

Name	Access address	Description	Reset value
R8_SPI0_CTRL_MOD	0x40004000	SPI0 mode control register	0x02
R8_SPI0_CTRL_CFG	0x40004001	SPI0 configuration register	0x00
R8_SPI0_INTER_EN	0x40004002	SPI0 interrupt enable register	0x00
R8_SPI0_CLOCK_DIV R8_SPI0_SLAVE_PRE	0x40004003	SPI0 clock divider register in master mode SPI0 preset data register in slave mode	0x10
R8_SPI0_BUFFER	0x40004004	SPI0 data buffer	0xXX
R8_SPI0_RUN_FLAG	0x40004005	SPI0 working status register	0x00
R8_SPI0_INT_FLAG	0x40004006	SPI0 interrupt flag register	0x40
R8_SPI0_FIFO_COUNT	0x40004007	SPI0 transceiver FIFO count register	0x00
R16_SPI0_TOTAL_CNT	0x4000400C	SPI0 data transceive data total length register	0x0000
R8_SPI0_FIFO	0x40004010	SPI0 data FIFO register	0xXX
R8_SPI0_FIFO_COUNT1	0x40004013	SPI0 transceiver FIFO count register	0x00
R16_SPI0_DMA_NOW	0x40004014	Current address of SPI0 DMA buffer	0xXXXX
R16_SPI0_DMA_BEG	0x40004018	Start address of SPI0 DMA buffer	0xXXXX
R16_SPI0_DMA_END	0x4000401C	End address of SPI0 DMA buffer	0xXXXX

SPI mode control register (R8_SPI0_CTRL_MOD)

Bit	Name	Access	Description	Reset value
7	RB_SPI_MISO_OE	RW	MISO pin output enable bit (can be used at data line switching direction in 2-wire	0

			mode): 1: MISO output enabled; 0: MISO output disabled.	
6	RB_SPI_MOSI_OE	RW	MOSI pin output enable bit: 1: MOSI output enabled; 0: MOSI output disabled.	0
5	RB_SPI_SCK_OE	RW	SCK pin output enable bit: 1: SCK output enabled; 0: SCK output disabled.	0
4	RB_SPI_FIFO_DIR	RW	FIFO direction setting bit: 1: Input mode (receive data); 0: Output mode (transmit data).	0
3	RB_SPI_SLV_CMD_MOD	RW	The first byte mode select in SPI0 slave mode: 1: First byte command mode; 0: Data stream mode. In the first byte command mode, it will be regarded as a command code when receiving the first byte of data after the SPI chip select is valid and RB_SPI_IF_FST_BYTE will be set to 1.	0
3	RB_SPI_MST_SCK_MOD	RW	Clock idle mode select in master mode: 1: Mode3 (SCK is at high level when idle); 0: Mode0 (SCK is at low level when idle).	0
2	RB_SPI_2WIRE_MOD	RW	2-wire or 3-wire SPI mode select in slave mode: 1: 2-wire mode/half duplex (SCK/MISO); 0: 3-wire mode/full duplex (SCK/MOSI/MISO).	0
1	RB_SPI_ALL_CLEAR	RW	Clear the FIFO/counter/interrupt flag of SPI: 1: Force to empty and clear; 0: Not clear.	1
0	RB_SPI_MODE_SLAVE	RW	SPI0 master/slave mode select: 1: Slave mode; 0: Master mode.	0

SPI configuration register (R8_SPI0_CTRL_CFG)

Bit	Name	Access	Description	Reset value
7	Reserved	RO	Reserved.	0
6	RB_SPI_MST_DLY_EN	RW	Input delay enable in master mode: 1: Enable, used for high-speed applications such as SPI clock close to half of Fsys; 0: Disable, regular applications.	0
5	RB_SPI_BIT_ORDER	RW	SPI data bit sequence selection: 1: Low bits in front; 0: High bits in front.	0
4	RB_SPI_AUTO_IF	RW	Enable the function of automatically clearing flag bit RB_SPI_IF_BYTE_END when	0

			accessing BUFFER/FIFO: 1: Enable; 0: Disable.	
3	Reserved	RO	Reserved.	0
2	RB_SPI_DMA_LOOP	RW	DMA address loop enable bit: 1: Enable address loop; 0: Disable address loop. If the DMA address loop is enabled, when the DMA address is added to the set end address, the auto loop points to the set first address.	0
1	Reserved	RO	Reserved.	0
0	RB_SPI_DMA_ENABLE	RW	DMA function enable bit: 1: Enable; 0: Disable.	0

SPI interrupt enable register (R8_SPI0_INTER_EN)

Bit	Name	Access	Description	Reset value
7	RB_SPI_IE_FST_BYTE	RW	In the first byte command mode of slave mode, first byte interrupt receive enable bit: 1: Enable receiving the first byte interrupt; 0: Disable receiving the first byte interrupt.	0
[6:5]	Reserved	RO	Reserved.	00b
4	RB_SPI_IE_FIFO_OV	RW	FIFO overflow (FIFO is full when receiving or FIFO is empty when sending) interrupt enable bit: 1: Enable interrupt; 0: Disable interrupt.	0
3	RB_SPI_IE_DMA_END	RW	DMA end interrupt enable bit: 1: Enable interrupt; 0: Disable interrupt.	0
2	RB_SPI_IE_FIFO_HF	RW	More than half of FIFO used interrupt enable bit: 1: Enable interrupt; 0: Disable interrupt.	0
1	RB_SPI_IE_BYTE_END	RW	SPI single byte transmission completion interrupt enable bit: 1: Enable interrupt; 0: Disable interrupt.	0
0	RB_SPI_IE_CNT_END	RW	SPI all byte transmission completion interrupt enable bit: 1: Enable interrupt; 0: Disable interrupt.	0

SPI clock divider register in master mode (R8_SPI0_CLOCK_DIV)

Bit	Name	Access	Description	Reset value
[7:0]	R8_SPI_CLOCK_DIV	RW	Frequency division factor in master mode, the minimum value is 2. Fsck= Fsys/frequency division factor.	10h

SPI preset data register in slave mode (R8_SPI0_SLAVE_PRE)

Bit	Name	Access	Description	Reset value
[7:0]	R8_SPI0_SLAVE_PRE	RW	Preset data first returned in slave mode.	10h

			Used to receive the returned data after first byte of data.	

SPI data buffer (R8_SPI0_BUFFER)

Bit	Name	Access	Description	Reset value
[7:0]	R8_SPI0_BUFFER	RW	SPI data transmit and receive buffer.	XXh

SPI working status register (R8_SPI0_RUN_FLAG)

Bit	Name	Access	Description	Reset value
7	RB_SPI_SLV_SELECT	RO	Chip select status bit in slave mode: 1: Being selected; 0: No chip select.	0
6	RB_SPI_SLV_CS_LOAD	RO	First loading status bit after chip select in slave mode: 1: Being loading R8_SPI0_SLAVE_PRE; 0: Not yet loaded or has completed.	0
5	RB_SPI_FIFO_READY	RO	FIFO ready status bit: 1: FIFO is ready (R16_SPI0_TOTAL_CNT is not 0, and the FIFO is not full when receiving or the FIFO is not empty when transmitting); 0: FIFO is not ready.	0
4	RB_SPI_SLV_CMD_ACT	RO	Command receive completion status bit in slave mode, that is, completing the exchange of first byte data: 1: That has just been exchanged is the first byte; 0: The first byte has not been exchanged or it is not the first byte.	0
[3:0]	Reserved	RO	Reserved.	0000b

SPI interrupt flag register (R8_SPI0_INT_FLAG)

Bit	Name	Access	Description	Reset value
7	RB_SPI_IF_FST_BYTE	RW1	The first byte received flag bit in slave mode: 1: The first byte has been received; 0: The first byte is not received.	0
6	RB_SPI_FREE	RO	Current SPI idle status bit: 1: Idle; 0: Not idle.	1
5	Reserved	RO	Reserved.	0
4	RB_SPI_IF_FIFO_OV	RW1	FIFO overflow (FIFO is full when receiving or FIFO is empty when transmitting) flag bit, write 1 to clear: 1: Overflow; 0: Not overflow.	0

3	RB_SPI_IF_DMA_END	RW1	DMA completion flag bit, write 1 to clear: 1: Has completed; 0: Not completed.	X
2	RB_SPI_IF_FIFO_HF	RW1	More than half of FIFO used (FIFO>=4 when receiving or FIFO<4 when transmitting) flag bit, write 1 to clear: 1: More than half of FIFO has been used; 0: FIFO has been used not more than half.	0
1	RB_SPI_IF_BYTE_END	RW1	SPI single byte transmission completion flag bit, write 1 to clear: 1: Single byte transmission has completed; 0: Single byte transmission is not completed.	0
0	RB_SPI_IF_CNT_END	RW1	SPI all byte transmission completion flag bit, write 1 to clear: 1: Transmission of all bytes is completed; 0: Transmission of all bytes is not completed.	1

SPI transceiver FIFO count register (R8_SPI0_FIFO_COUNT)

Bit	Name	Access	Description	Reset value
[7:0]	R8_SPI0_FIFO_COUNT	RW	The current byte count in FIFO.	00h

SPI transceiver FIFO count register (R8_SPI0_FIFO_COUNT1)

Bit	Name	Access	Description	Reset value
[7:0]	R8_SPI0_FIFO_COUNT1	RW	The current byte count in FIFO. The same as R8_SPI0_FIFO_COUNT.	00h

SPI transceive data total length register (R16_SPI0_TOTAL_CNT)

Bit	Name	Access	Description	Reset value
[15:0]	R16_SPI0_TOTAL_CNT	RW	The total number of bytes of SPI data transceiving in master mode, and the lower 12 bits are valid. At most 4095 bytes can be received/transmitted at a time when using DMA. It is not supported in slave mode.	0000h

SPI data FIFO register (R8_SPI0_FIFO)

Bit	Name	Access	Description	Reset value
[7:0]	R8_SPI0_FIFO	RO/ WO	Data FIFO register.	XXh

The registers R8_SPI0_BUFFER and R8_SPI0_FIFO are both SPI data registers, and the main differences between them are:

Reading R8_SPI0_BUFFER means to obtain the data from the last exchange of SPI, and it does not affect FIFO and R8_SPI0_FIFO_COUNT,

Writing to R8_SPI0_BUFFER in master mode means to send the byte directly, and the write operation in

slave mode is not defined;
Reading R8_SPI0_FIFO means to obtain the data from the earliest exchange in FIFO, which will reduce FIFO and R8_SPI0_FIFO_COUNT,
Writing to R8_SPI0_FIFO means to temporarily store the data in FIFO. In slave mode, the external SPI host decides when to take it. In master mode, the transmission is automatically started when R16_SPI0_TOTAL_CNT is not 0.

Current address of SPI0 DMA buffer (R16_SPI0_DMA_NOW)

Bit	Name	Access	Description	Reset value
[15:0]	R16_SPI0_DMA_NOW	RW	Current address of DMA data buffer. It can be used to calculate the number of conversions, and the calculation method is: COUNT=SPI0_DMA_NOW-SPI0_DMA_BEG.	XXXXh

Start address of SPI0 DMA buffer (R16_SPI0_DMA_BEG)

Bit	Name	Access	Description	Reset value
[15:0]	R16_SPI0_DMA_BEG	RW	Start address of DMA data buffer, only the lower 14 bits are valid.	XXXXh

End address of SPI0 DMA buffer (R16_SPI0_DMA_END)

Bit	Name	Access	Description	Reset value
[15:0]	R16_SPI0_DMA_END	RW	End address of DMA data buffer (not included), only the lower 14 bits are valid.	XXXXh

10.3 SPI transfer format

SPI supports 2 transfer formats, mode0 and mode3, which can be selected by setting RB_SPI_MST_SCK_MOD in R8_SPI0_CTRL_MOD. Always sample and input serial data at rising edge of SCK, and output serial data at falling edge.

The data transfer format is shown in the figure below:

Mode0: RB_SPI_MST_SCK_MOD = 0

模式0时序图

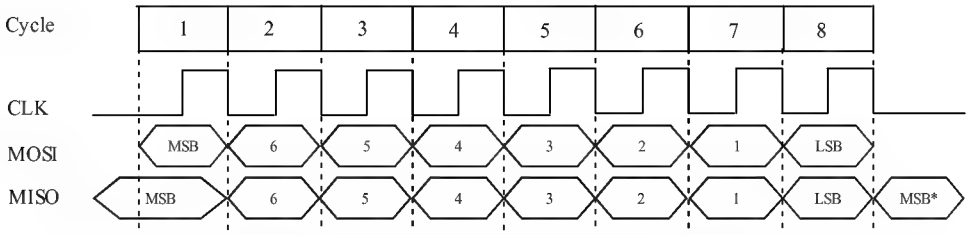

Figure 10-1 0 Transfer format of SPI mode0

Mode3: RB_SPI_MST_SCK_MOD = 1

模式3时序图

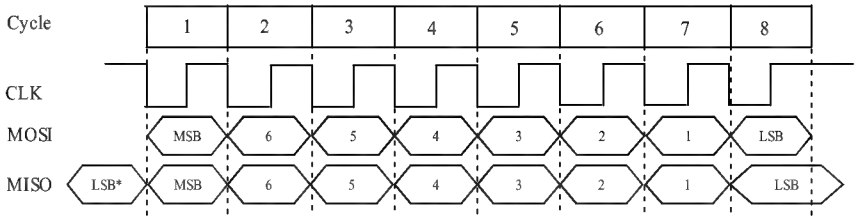

Figure 10-2 3 Transfer format of SPI mode3

10.4 SPI configuration

10.4.1 Master mode

In SPI master mode, serial clock is generated on SCK pin, and chip select pin can be specified as any I/O pin.

Configuration Steps:

(1) Set R8_SPI0_CLOCK_DIV, and configure the clock frequency;

(2) Set RB_SPI_MODE_SLAVE in R8_SPI0_CTRL_MOD to 0, and configure SPI as the master mode;

(3) Set RB_SPI_MST_SCK_MOD in R8_SPI0_CTRL_MOD, and select clock idle mode 0 or mode 3;

(4) Set the RB_SPI_FIFO_DIR in R8_SPI0_CTRL_MOD to configure the FIFO direction. If it is 1, FIFO is used to receive; if it is 0, FIFO is used to transmit;

(5) Set RB_SPI_MOSI_OE and RB_SPI_SCK_OE in R8_SPI0_CTRL_MOD to 1, and set RB_SPI_MISO_OE to 0, and set GPIO direction configuration register (R32_PA/PB_DIR), to make the MOSI pin and SCK pin as output, and MISO pin as input;

(6) SCK remains unchanged in 2-wire mode, RB_SPI_MOSI_OE=0, MOSI is not used. Input (same as 3-wire mode, RB_SPI_MISO_OE=0 and the pin is set as input) and output (RB_SPI_MISO_OE=1 and the pin is set as output) are realized by MISO half-duplex, and the directions are switched manually;

(7) Optional step. If DMA is enabled, it is needed to write the start address of transceiver buffer to R16_SPI_DMA_BEG and write the end address (not included) to R16_SPI_DMA_END. It is recommended to set RB_SPI_DMA_ENABLE after setting RB_SPI_FIFO_DIR. If R16_SPI0_TOTAL_CNT is confirmed as 0, RB_SPI_DMA_ENABLE can be first set to 1 to enable DMA function.

Data transmission:

(1) Set RB_SPI_FIFO_DIR to 0, and the current FIFO direction is output;

(2) Write to the R16_SPI0_TOTAL_CNT register, and set the length of the data to be sent;

(3) Write to the R8_SPI0_FIFO register and write the data to be sent to FIFO. If R8_SPI0_FIFO_COUNT is less than FIFO capacity, continue to write FIFO. If DMA is enabled, DMA will automatically load FIFO to complete this step;

(4) As long as R16_SPI0_TOTAL_CNT is not 0 and there is data in FIFO, SPI master will automatically send data, otherwise, it will pause;

(5) Wait until R16_SPI0_TOTAL_CNT register becomes 0, indicating that the data transmission is completed. If only one byte is sent, you can also query and wait for RB_SPI_FREE to be idle or wait for R8_SPI0_FIFO_COUNT to be 0.

Data reception:

(1) Set RB_SPI_FIFO_DIR to 1, and the current FIFO direction is input;

(2) Write to the R16_SPI0_TOTAL_CNT register, and set the length of the data to be received;

(3) As long as R16_SPI0_TOTAL_CNT is not 0 and FIFO is not full, SPI master will automatically receive data, otherwise, it will pause;
(4) Wait until R8_SPI0_FIFO_COUNT register is not 0, indicating that the return data is received, the value read in R8_SPI0_FIFO is the received data. If DMA is enabled, DMA will automatically read FIFO to complete this step.

10.4.2 Slave mode

SPI0 supports the slave mode. In the slave mode, SCK pin is used to receive the serial clock of SPI master connected to the external.

Configuration Steps:
(1) Set RB_SPI_MODE_SLAVE in R8_SPI0_CTRL_MOD to 1, and configure SPI0 as the slave mode;
(2) Set RB_SPI_SLV_CMD_MOD in R8_SPI0_CTRL_MOD as needed, and select the slave first byte mode or data stream mode;
(3) Set RB_SPI_FIFO_DIR in R8_SPI0_CTRL_MOD to configure the FIFO direction. If it is 1, FIFO is used to receive; if it is 0, FIFO is used to transmit;
(4) Set RB_SPI_MOSI_OE and RB_SPI_SCK_OE in R8_SPI0_CTRL_MOD to 0, and set RB_SPI_MISO_OE to 1, and set GPIO direction configuration register (R32_PA/PB_DIR) to make MOSI pin, SCK pin and SCS pin as input, MISO pin as input (support connect multiple slaves under the bus; MISO will automatically switch to output after chip select; one master with one slave is also supported) or output (only for connection of one master with one slave). In SPI slave mode, the I/O pin direction of MISO can be set as output by GPIO direction configuration register, it can also automatically switch to output during the period of valid SPI chip select. But its output data is selected by RB_SPI_MISO_OE, it outputs SPI data when it is 1, and it outputs data of GPIO data output register when it is 0. It is recommended to set the MISO pin as input, so that MISO does not output when chip select is invalid, so that SPI bus can be shared during multiple-device operation;
(5) Optional, set the preset data register R8_SPI0_SLAVE_PRE in SPI0 slave mode, used to be automatically loaded into the buffer for the first time after chip select for external output. After 8 clocks (that is, the first data byte is exchanged between the master and the slave), the controller will obtain the first data byte (command code) sent by the external SPI host, and the external SPI host obtains the preset data (status value) in R8_SPI0_SLAVE_PRE through exchange. The bit 7 of R8_SPI0_SLAVE_PRE will be automatically loaded into the MISO pin during SCK low level period after the SPI chip select is valid. For SPI mode 0 (CLKis at low level by default), if the bit 7 of R8_SPI0_SLAVE_PRE is preset, the external SPI host will obtain the preset value of bit 7 of R8_SPI0_SLAVE_PRE by inquiring the MISO pin when the SPI chip select is valid but has no data transmission, thereby the value of bit 7 of R8_SPI0_SLAVE_PRE can be obtained only by a valid SPI chip select (Usually a busy status is provided for the host, so the host can quickly query);
(6) Optional. If DMA is enabled, it is requiered to write the start address of transceiver buffer to R16_SPI_DMA_BEG and write the end address (not included) to R16_SPI_DMA_END. It is recommended to set RB_SPI_DMA_ENABLE after setting RB_SPI_FIFO_DIR.

Data transmission:
(1) Set RB_SPI_FIFO_DIR in R8_SPI0_CTRL_MOD to 0, and the current FIFO direction as output;
(2) Optional step. If DMA is enabled, it is needed to set RB_SPI_DMA_ENABLE to 1 to enable DMA function;
(3) Write multiple transmission data into FIFO register R8_SPI0_FIFO, and the external host determines when to take itaway. If DMA is enabled, DMA will automatically load FIFO to complete this step;
(4) Query R8_SPI0_FIFO_COUNT, if it is not full, continue to write data to be sent to FIFO.

Data reception:

(1) Set RB_SPI_FIFO_DIR of R8_SPI0_CTRL_MOD to 1, and the current FIFO direction as input;
(2) Optional step. If DMA is enabled, it is needed to set RB_SPI_DMA_ENABLE to 1 to enable DMA function;
(3) Query R8_SPI0_FIFO_COUNT, if it is not empty, the data has been received and the data will be taken away by reading R8_SPI0_FIFO. If DMA is enabled, DMA will automatically read FIFO to complete this step;
(4) For reception of the single byte data, R8_SPI0_BUFFER can be read directly without using FIFO.

10.5 SPI Timing

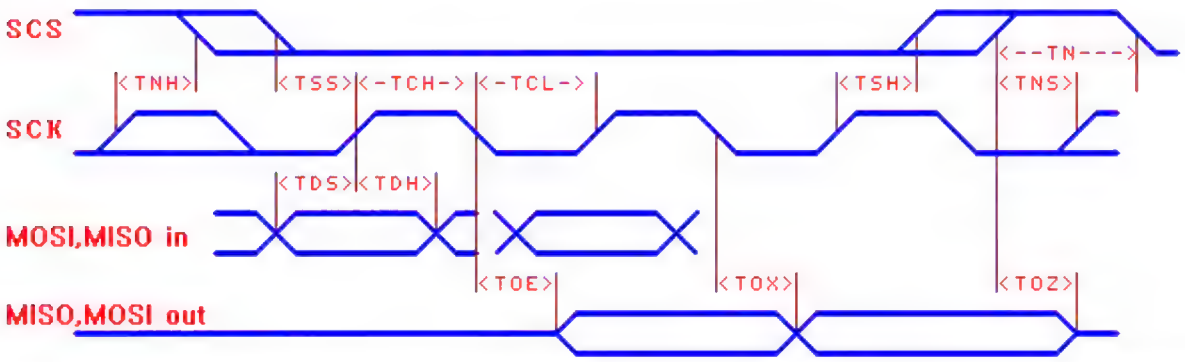

Name	Parameter description (TA=25°C, VIO33=3.3V)	Min.	Typ.	Max.	Unit
TSS	Setup time of valid SCS before SCK rising edge	Tsys*1.05			nS
TSH	Hold time of valid SCS before SCK rising edge	Tsys*1.05			nS
TNS	Setup time of invalid SCS before SCK rising edge	15			nS
TNH	Hold time of invalid SCS before SCK rising edge	15			nS
TN	Time of invalid SCS (interval time of SPI operation)	Tsys*2			nS
TCH	Time of SCK clock at high level	Tsys*0.55			nS
TCL	Time of SCK clock at low level	Tsys*0.55			nS
TDS	Setup time of MOSI/MISO input before SCK rising edge	8			nS
TDH	Hold time of MOSI/MISO input before SCK rising edge	5			nS
TOE	SCK falling edge to MISO/MOSI output valid	0		18	nS
TOX	SCK falling edge to MISO/MOSI output change	0	5	16	nS
TOZ	SCS invalid to MISO/MOSI output invalid	2		24	nS

Note: Tsys is the cycle of system clock frequency (1/Fsys).

Chapter 11 PWM

11.1 Introduction to PWM

In addition to the 4-channel 26-bit PWM output provided by timer, the system also provides 8-channel 8-bit PWM output (PWM4~PWM11), with adjustable duty ratio and 8 optional cycles as the fixed PWM cycle, so the operation is simple.

11.2 Register description

Table 11-1 PWMx registers

Name	Access address	Description	Reset value
R8_PWM_OUT_EN	0x40005000	PWMx output enable register	0x00
R8_PWM_POLAR	0x40005001	PWMx output polarity configuration register	0x00
R8_PWM_CONFIG	0x40005002	PWMx configuration control register	0x0X
R8_PWM_CLOCK_DIV	0x40005003	PWMx clock divider register	0x00
R32_PWM4_7_DATA	0x40005004	PWM4/5/6/7 data hold register	0xXXXXXXXX
R8_PWM4_DATA	0x40005004	PWM4 data hold register	0xXX
R8_PWM5_DATA	0x40005005	PWM5 data hold register	0xXX
R8_PWM6_DATA	0x40005006	PWM6 data hold register	0xXX
R8_PWM7_DATA	0x40005007	PWM7 data hold register	0xXX
R32_PWM8_11_DATA	0x40005008	PWM8/9/10/11 data hold register	0xXXXXXXXX
R8_PWM8_DATA	0x40005008	PWM8 data hold register	0xXX
R8_PWM9_DATA	0x40005009	PWM9 data hold register	0xXX
R8_PWM10_DATA	0x4000500A	PWM10 data hold register	0xXX
R8_PWM11_DATA	0x4000500B	PWM11 data hold register	0xXX
R8_PWM_INT_CTRL	0x4000500C	PWMx interrupt control and status register	0x00

PWMx output enable register (R8_PWM_OUT_EN)

Bit	Name	Access	Description	Reset value
7	RB_PWM11_OUT_EN	RW	PWM11 output enable bit: 1: Enable; 0: Disable.	0
6	RB_PWM10_OUT_EN	RW	PWM10 output enable bit: 1: Enable; 0: Disable.	0
5	RB_PWM9_OUT_EN	RW	PWM9 output enable bit: 1: Enable; 0: Disable.	0
4	RB_PWM8_OUT_EN	RW	PWM8 output enable bit: 1: Enable; 0: Disable.	0
3	RB_PWM7_OUT_EN	RW	PWM7 output enable bit: 1: Enable; 0: Disable.	0
2	RB_PWM6_OUT_EN	RW	PWM6 output enable bit: 1: Enable; 0: Disable.	0
1	RB_PWM5_OUT_EN	RW	PWM5 output enable bit:	0

			1: Enable; 0: Disable.	
0	RB_PWM4_OUT_EN	RW	PWM4 output enable bit: 1: Enable; 0: Disable.	0

PWMx output polarity configuration register (R8_PWM_POLAR)

Bit	Name	Access	Description	Reset value
7	RB_PWM11_POLAR	RW	PWM11 output polarity control bit: 1: Default at high level, active low; 0: Default at low level, active high.	0
6	RB_PWM10_POLAR	RW	PWM10 output polarity control bit: 1: Default at high level, active low; 0: Default at low level, active high.	0
5	RB_PWM9_POLAR	RW	PWM9 output polarity control bit: 1: Default at high level, active low; 0: Default at low level, active high.	0
4	RB_PWM8_POLAR	RW	PWM8 output polarity control bit: 1: Default at high level, active low; 0: Default at low level, active high.	0
3	RB_PWM7_POLAR	RW	PWM7 output polarity control bit: 1: Default at high level, active low; 0: Default at low level, active high.	0
2	RB_PWM6_POLAR	RW	PWM6 output polarity control bit: 1: Default at high level, active low; 0: Default at low level, active high.	0
1	RB_PWM5_POLAR	RW	PWM5 output polarity control bit: 1: Default at high level, active low; 0: Default at low level, active high.	0
0	RB_PWM4_POLAR	RW	PWM4 output polarity control bit: 1: Default at high level, active low; 0: Default at low level, active high.	0

PWMx configuration control register (R8_PWM_CONFIG)

Bit	Name	Access	Description	Reset value
7	RB_PWM10_11_STAG_EN	RW	PWM10/11 interleaved output enable bit: 1: Interleaved output; 0: Independent output.	0
6	RB_PWM8_9_STAG_EN	RW	PWM8/9 interleaved output enable bit: 1: Interleaved output; 0: Independent output.	0
5	RB_PWM6_7_STAG_EN	RW	PWM6/7 interleaved output enable bit: 1: Interleaved output; 0: Independent output.	0
4	RB_PWM4_5_STAG_EN	RW	PWM4/5 interleaved output enable bit: 1: Interleaved output; 0: Independent output.	0
[3:2]	RB_PWM_CYC_MOD	RW	PWM data width select: 00: 8-bit data width; 01: 7-bit data width;	00b

			00: 6-bit data width; 11: 5-bit data width.	
1	RB_PWM_STAG_ST	RO	PWM interleave flag bit: 1: PWM5/7/9/11 is allowed to output; 0: PWM4/6/8/10 is allowed to output.	X
0	RB_PWM_CYCLE_SEL	RW	PWM cycle select, matching with PWM data width: 1: 255/127/63/31 clock cycles; 0: 256/128/64/32 clock cycles.	0

PWMx clock divider register (R8_PWM_CLOCK_DIV)

Bit	Name	Access	Description	Reset value
[7:0]	R8_PWM_CLOCK_DIV	RW	PWM reference clock frequency division factor. Fpwm=Fsys/R8_PWM_CLOCK_DIV.	00h

PWM data hold register group1 (R32_PWM4_7_DATA)

Bit	Name	Access	Description	Reset value
[31:24]	R8_PWM7_DATA	RW	PWM7 data hold register.	XXb
[23:16]	R8_PWM6_DATA	RW	PWM6 data hold register.	XXb
[15:8]	R8_PWM5_DATA	RW	PWM5 data hold register.	XXb
[7:0]	R8_PWM4_DATA	RW	PWM4 data hold register.	XXb

PWM data hold register group2 (R32_PWM8_11_DATA)

Bit	Name	Access	Description	Reset value
[31:24]	R8_PWM11_DATA	RW	PWM11 data hold register.	XXb
[23:16]	R8_PWM10_DATA	RW	PWM10 data hold register.	XXb
[15:8]	R8_PWM9_DATA	RW	PWM9 data hold register.	XXb
[7:0]	R8_PWM8_DATA	RW	PWM8 data hold register.	XXb

PWMx interrupt control and status register (R8_PWM_INT_CTRL)

Bit	Name	Access	Description	Reset value
7	RB_PWM_IF_CYC	RW1	PWM cycle end flag bit, write 1 to clear: 1: End; 0: Not end.	0
[6:2]	Reserved	RO	Reserved.	00000b
1	RB_PWM_CYC_PRE	RW	Select the interrupt time point at the end of PWM cycle: 1: Interrupt is generated 16 counts in advance (take 8-bit data width as an example, interrupt is generated when the count reaches 240); 0: Interrupt is generated 2 counts in advance (take 8-bit data width as an example, interrupt is generated when the count reaches 254).	0

0	RB_PWM_IE_CYC	RW	Interrupt enable bit at the end of PWM cycle: 1: Enable interrupt; 0: Disable interrupt.	0

11.3 PWM configuration

(1) Set the R8_PWM_CLOCK_DIV register, to configure the reference clock frequency of PWM;
(2) Set the PWM output polarity configuration register (R8_PWM_POLAR), to configure the output polarity of the corresponding PWMx;
(3) Set the PWM configuration control register (R8_PWM_CONFIG), to set the PWM mode, data width and cycle;
(4) Set PWM output enable register (R8_PWM_OUT_EN), to enable the corresponding PWMx output;
(5) Calculate the data according to the required duty cycle and write into the corresponding data hold register (R8_PWMx_DATA);
(6) Set the required PWM pin direction of PWM4-PWM11 as output, optional, set the drive capability of corresponding I/O;
(7) Update the data in R8_PWMx_DATA as needed, to update the output duty cycle.

The duty cycle of output PWM can be modified by adjusting R8_PWMx_DATA register. The calculation formula of duty cycle is:

Ncyc = RB_PWM_CYCLE_SEL ? (2^n-1) : (2^n)

(n=data bit width), the Ncyc result ranges from 63 to 256.

Duty cycle of PWMx output valid level = R8_PWMx_DATA / Ncyc * 100%

PWMx output frequency Fpwmout = Fpwm / Ncyc = Fsys/R8_PWM_CLOCK_DIV / Ncyc

To generate a DC signal through PWM, you can use R/C and other circuits to filter at PWMx output end. It is recommended to use a 2-stage RC with a time constant much larger than 4 / Fpwmout, or a 1-stage RC with a time constant much larger than 100 / Fpwmout.

Chapter 12 Reserved

Chapter 13 Reserved

Chapter 14 Reserved

Chapter 15 Analog to digital converter (ADC)

15.1 Introduction to ADC

The chip provides a 12-bit successive approximation analog to digital converter (ADC) and up to 12 channels. CH573 supports 10 external signal sources and 2 internal signal sources. While CH571 only supports 6 external signal sources and 2 internal signal sources.

15.1.1 Main features

- 12-bit resolution.
- 10 external voltage sampling channels, internal temperature detection channels and internal battery voltage detection channels.
- Single-ended input mode and differential input mode detection.
- Sampling clock frequency is optional.
- ADC input voltage range: 0V -VIO33.
- Optional PGA: provide gain adjustment options.
- Optional input buffer BUF: support high resistance signal source.
- CH573 supports DMA and automatic continuous ADC sampling in timing interval, with adjustable interval, while CH571 does not support.

15.1.2 Functional description

The figure below is the block diagram of an ADC module.

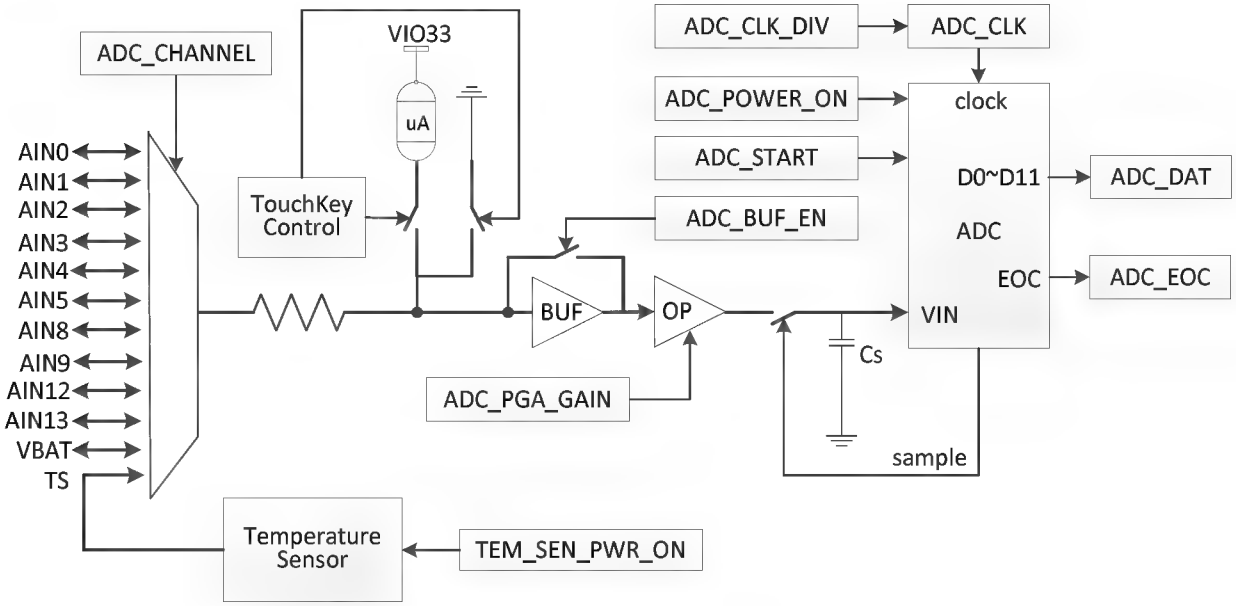

Figure 15-1 Architecture diagram of ADC

15.2 Register description

Table 15-1 ADC registers

Name	Access address	Description	Reset value
R8_ADC_CHANNEL	0x40001058	ADC input channel select register	0x0F
R8_ADC_CFG	0x40001059	ADC configuration register	0xA0

R8_ADC_CONVERT	0x4000105A	ADC conversion control register	0x00
R8_TEM_SENSOR	0x4000105B	Temperature sensor control register	0x00
R16_ADC_DATA	0x4000105C	ADC data register	0x0XXX
R8_ADC_INT_FLAG	0x4000105E	ADC interrupt flag register	0x00
R32_ADC_DMA_CTRL	0x40001060	DMA control and status register	0x00
R8_ADC_CTRL_DMA	0x40001061	DMA and interrupt control register	0x00
R8_ADC_DMA_IF	0x40001062	ADC and DMA interrupt flag register	0x00
R8_ADC_AUTO_CYCLE	0x40001063	Continuous ADC timing cycle register	0xXX
R16_ADC_DMA_NOW	0x40001064	Current buffer address of DMA	0x0000XXXX
R16_ADC_DMA_BEG	0x40001068	Start buffer address of DMA	0x0000XXXX
R16_ADC_DMA_END	0x4000106C	End buffer address of DMA	0x0000XXXX

ADC input channel select register (R8_ADC_CHANNEL)

Bit	Name	Access	Description	Reset value
[7:4]	Reserved	RO	Reserved.	0000b
[3:0]	RB_ADC_CH_INX	RW	ADC channel index number, a total of 12 channels: 00h-05h: External signal channels AIN0-AIN5; 08h-09h: External signal channel AIN8-AIN9; 0Ch-0Dh: External signal channel AIN12-AIN13; 0Eh: Battery voltage VBAT; 0Fh: Built-in temperature sensor TS. It is recommended to use idle channel AIN7 by setting 7 during ADC calibration.	1111b

ADC configuration register (R8_ADC_CFG)

Bit	Name	Access	Description	Reset value
[7:6]	RB_ADC_CLK_DIV	RW	ADC clock frequency select: 00: CK32M-based 10 frequency division, 3.2MHz; 01: CK32M-based 4 frequency division, 8MHz; 10: CK32M-based 6 frequency division, 5.33MHz; 11: CK32M-based 8 frequency division, 4MHz; The actual sampling rate is approximately 1/18 of the clock frequency.	10b
[5:4]	RB_ADC_PGA_GAIN	RW	Input PGA gain select of ADC: 00: -12dB, 1/4 times; 01: -6dB, 1/2 times; 10: 0dB, 1 times, no gain; 11: 6dB, 2 times.	10b
3	RB_ADC_OFS_TEST	RW	ADC offset error test mode:	0

			1: Test/calibrate mode. The lower 12-bit data of data register R16_ADC_DATA will be inverted bit by bit in test mode (0x0573 is inverted to 0x0A8C); 0: Normal mode.	
2	RB_ADC_DIFF_EN	RW	ADC channel signal input mode: 1: Differential input; 0: Single-ended input.	0
1	RB_ADC_BUF_EN	RW	ADC input buffer BUF enable: 1: Enable; 0: Disable.	0
0	RB_ADC_POWER_ON	RW	ADC module power enable control: 1: Enable; 0: Disable.	0

Table 15-2 Table of PGA gain selection and input voltage range

PGA gain selection	The sampled voltage, Vi, calculated from the data converted by ADC	Upper limit of theoretically measurable voltage	Theoretically measurable voltage range (assuming Vref=1.05V)	Recommended range of actually available voltage
-12dB (1/4)	(ADC/512-3)*Vref	5*Vref	-0.2V ~ VIO33+0.2V	2.9V ~ VIO33
-6dB (1/2)	(ADC/1024-1)*Vref	3*Vref	-0.2V ~ 3.15V	1.9V ~ 3V
0dB (1)	(ADC/2048)*Vref	2*Vref	0V ~ 2.1V	0V ~ 2V
6dB (2)	(ADC/4096+0.5)*Vref	1.5*Vref	0.525V ~ 1.575V	0.6V ~ 1.5V

ADC: The digital quantity after ADC conversion, namely R16_ADC_DATA.

Vref: The actual voltage value of the power node VINTA of the internal analog circuit is usually 1.05V±0.015V.

Note: If a low voltage is sampled after a negative gain (signal reduction), a large error may be caused in a voltage range. If a high voltage is sampled after a positive gain (signal amplification), ADC conversion value may overflow, so it is recommended to select a reasonable gain mode according to the voltage range of the measured signal.

It is recommended to enable the input buffer by default. Only when the internal resistance of the external signal source is less than 1KΩ, the input buffer can be turned off for ADC.

When using differential input, it is recommended to turn off the input buffer. When used for TouchKey detection, the input buffer must be enabled, and it is recommended to select one of 2 gains of 0dB (priority) or -6dB.

ADC conversion control register (R8_ADC_CONVERT)

Bit	Name	Access	Description	Reset value
7	RB_ADC_EOC_X	RO	ADC conversion end flag (asynchronous signal): 1: Completed; 0: In progress.	0
[6:1]	Reserved	RO	Reserved.	000000b
0	RB_ADC_START	RW	ADC conversion enable control and status, automatically cleared: 1: Start to convert/being converted; 0: Stop converting.	0

Temperature sensor control register (R8_TEM_SENSOR)

Bit	Name	Access	Description	Reset value
7	RB_TEM_SEN_PWR_ON	RW	TS temperature sensor power enable control: 1: Enable; 0: Disable.	0
[6:0]	Reserved	RW	Reserved.	0000000b

ADC data register (R16_ADC_DATA)

Bit	Name	Access	Description	Reset value
[15:12]	Reserved	RW	Reserved.	0000b
[11:0]	RB_ADC_DATA	RO	Data after ADC conversion.	XXXh

ADC interrupt flag register (R8_ADC_INT_FLAG)

Bit	Name	Access	Description	Reset value
7	RB_ADC_IF_EOC	RO	ADC conversion finished flag. This flag can be cleared by writing to register R8_ADC_CONVERT or R8_TKEY_CONVERT.	0
[6:0]	Reserved	RW	Reserved.	0000000b

DMA and interrupt control register (R8_ADC_CTRL_DMA)

Bit	Name	Access	Description	Reset value
7	RB_ADC_AUTO_EN	RW	Automatic continuous ADC sampling enable at timing interval: 1: Enable continuous ADC; 0: Disable automatic ADC.	0
[6:5]	Reserved	RO	Reserved.	00b
4	RB_ADC_IE_EOC	RW	ADC conversion completion interrupt enable bit: 1: Enable interrupt; 0: Disable interrupt.	0
3	RB_ADC_IE_DMA_END	RW	DMA end interrupt enable bit: 1: Enable interrupt; 0: Disable interrupt.	0
2	RB_ADC_DMA_LOOP	RW	DMA address loop enable bit: 1: Enable address loop; 0: Disable address loop. If the DMA address loop is enabled, when the DMA address is added to the set end address, it will automatically loop to the start address that is set.	0
1	Reserved	RO	Reserved.	0
0	RB_ADC_DMA_ENABLE	RW	DMA function enable bit: 1: Enable DMA; 0: Disable DMA.	0

ADC and DMA interrupt flag register (R8_ADC_DMA_IF)

Bit	Name	Access	Description	Reset value
[7:5]	Reserved	RO	Reserved.	000b
4	RB_ADC_IF_END_ADC	RW1	ADC conversion completion interrupt flag, write 1 to clear or when data is taken by DMA or write to register R8_ADC_CONVERT to clear this flag: 1: ADC has been completed once; 0: Not completed.	0
3	RB_ADC_IF_DMA_END	RW1	DMA completion flag bit, write 1 to clear: 1: DMA has been completed; 0: Not completed.	0
[2:0]	Reserved	RO	Reserved.	000b

Continuous ADC timing cycle register (R8_ADC_AUTO_CYCLE)

Bit	Name	Access	Description	Reset value
[7:0]	R8_ADC_AUTO_CYCLE	RW	The starting value of continuous ADC timing cycle is counted in unit of 16 system clocks and reloaded after reaching 256. Calculation: timing: =(256-R8_ADC_AUTO_CYCLE)*16*Tsys	XXh

DMA current buffer address (R16_ADC_DMA_NOW)

Bit	Name	Access	Description	Reset value
[15:0]	R16_ADC_DMA_NOW	RO	Current address of DMA data buffer. It can be used to calculate the number of conversions. Calculation: COUNT=(ADC_DMA_NOW-ADC_DMA_BEG)/2.	XXXXh

DMA start buffer address (R16_ADC_DMA_BEG)

Bit	Name	Access	Description	Reset value
[15:0]	R16_ADC_DMA_BEG	RW	The start address of DMA data buffer, only the lower 14 bits are valid, and the address must be 2-byte aligned.	XXXXh

DMA end buffer address (R16_ADC_DMA_END)

Bit	Name	Access	Description	Reset value
[15:0]	R16_ADC_DMA_END	RW	The end address of DMA data buffer (not included), only the lower 14 bits are valid, and the address must be 2-byte aligned.	XXXXh

15.3 ADC configuration

15.3.1 External channel sampling

(1) Set RB_ADC_POWER_ON in R8_ADC_CFG to 1 to enable ADC, select the sampling frequency through RB_ADC_CLK_DIV, and enable the input buffer and select signal gain through RB_ADC_BUF_EN and RB_ADC_PGA_GAIN;
(2) Set R8_ADC_CHANNEL register, and select external or internal signal channel;
(3) Set the R8_ADC_CONVERT register, set RB_ADC_START, and enable ADC conversion;
(4) Query and wait for RB_ADC_START to be automatically cleared or wait for RB_ADC_IF_EOC to be set to 1, indicating that the conversion is completed. 12-bit ADC conversion data can be obtained by reading R16_ADC_DATA. If time is enough, it is recommended to convert again and discard the ADC data obtained first;
(5) Repeat steps 2, 3 and 4 to continue to sample another channel or the next set of data;
(6) Single ADC conversion cycle: ADC sampling (4 clocks) + switching 1 clock + conversion time (12 clocks) ≈ 17 Tadc, and 1 time interval is added for continuous ADC. Among them, Tadc = Tsys @ RB_ADC_CLK_DIV;
(7) If differential input is used:
Enable differential, select 0# channel: it actually performs differential conversion on the voltage of AIN0 (positive end) and AIN2 (negative end);
Enable differential, select 1# channel: it actually performs differential conversion on the voltage of AIN1 (positive end) and AIN3 (negative end);
As a result of ADC conversion, if the data is greater than 0x800, it means that the voltage of the differential positive end is higher than the voltage of the differential negative end. If the data is less than 0x800, it means the voltage of the differential positive end is lower than the voltage of the differential negative end. Taking the PGA gain selection of 0dB as an example, the theoretically measurable voltage ranges from -1.05V to 1.05V, and 0x400 means that the voltage of the differential positive end is lower than the voltage of the differential negative end by about 0.5 Vref.

15.3.2 Temperature sensor sampling

(1) Set the RB_TEM_SEN_PWR_ON in R8_TEM_SENSOR register to 1 to enable the temperature sensor, set R8_ADC_CHANNEL to 15, and select the temperature sensor signal and connect to ADC input;
(2) Set RB_ADC_POWER_ON to 1 to enable the ADC, set RB_ADC_DIFF_EN to 1, set RB_ADC_CLK_DIV, set RB_ADC_BUF_EN to 0, and set RB_ADC_PGA_GAIN to 11;
(3) Set R8_ADC_CONVERT register, set RB_ADC_START to 1, and enable ADC conversion;
(4) Query and wait for RB_ADC_START to be automatically cleared or wait for RB_ADC_IF_EOC to be set to 1, read R16_ADC_DATA to obtain 12-bit ADC conversion data. In case of high requirements for accuracy, it is recommended to repeat steps 3 and 4 for several times to calculate the average value of ADC data;
(5) The temperature value is obtained according to the conversion relationship between voltage and temperature. Please refer to the evaluation board example program for details.

15.3.3 Enable DMA automatic continuous ADC

(1) Set ADC parameters and select channels with reference to non-DMA mode;
(2) Set R8_ADC_AUTO_CYCLE to select continuous ADC cycle;
(3) Set the R16_ADC_DMA_BEG register as the start address of buffer that stores ADC data, set the register R16_ADC_DMA_END as the end address of buffer that stores ADC data (not included), and set the RB_ADC_DMA_ENABLE of R8_ADC_CTRL_DMA to 1, to enable the DMA function;
(4) Optional step. If it is needed to enable interrupts, set the corresponding interrupt enable register bit.

When RB_ADC_IE_EOC=1, the ADC will be triggered by RB_ADC_IF_END_ADC to complete the interrupt. When RB_ADC_IE_EOC=0 and RB_ADC_IE_DMA_END=0, the ADC will be triggered by RB_ADC_IF_EOC to complete the interrupt;

(5) Set RB_ADC_AUTO_EN to 1 to enable automatic continuous ADC;

(6) RB_ADC_IF_EOC and RB_ADC_IF_END_ADC is set to 1 after ADC is completed, but RB_ADC_IF_END_ADC is automatically cleared after the data is taken by DMA, so you can query RB_ADC_IF_EOC to query ADC completion status.

Chapter 16 Touch-Key

16.1 Introduction to Touch-Key

The CH573 provides a capacitance detection module, which can be used with the ADC module to realize the detection function of capacitance touchkey. There are a total of 10 input channels, and the supported capacitance value of touchkey ranges from 10pF to 100pF.

16.2 Register description

Table 16-1 TouchKey registers

Name	Access address	Description	Reset value
R8_TKEY_COUNT	0x40001054	TouchKey charge/discharge time register	0xXX
R8_TKEY_CONVERT	0x40001056	TouchKey detection control register	0x00
R8_TKEY_CFG	0x40001057	TouchKey configuration register	0x00

TouchKey charge and discharge time register (R8_TKEY_COUNT)

Bit	Name	Access	Description	Reset value
[7:5]	RB_TKEY_DISCH_CNT	RW	The number of Touch-Key discharge cycles, counting in unit of ADC clock selected by RB_ADC_CLK_DIV. Calculation method: discharge time = (RB_TKEY_DISCH_CNT+1)*Tadc.	XXXb
[4:0]	RB_TKEY_CHARG_CNT	RW	The number of Touch-Key charge cycle, counting in unit of ADC clock selected by RB_ADC_CLK_DIV. Calculation method: charge time = (RB_TKEY_CHARG_CNT+4)*Tadc.	XXXXXb

TouchKey detection control register (R8_TKEY_CONVERT)

Bit	Name	Access	Description	Reset value
[7:1]	Reserved	RO	Reserved.	0000000b
0	RB_TKEY_START	RW	TouchKey detection control and status, automatically cleared: 1: Start to detect/being converted; 0: Stop converting.	0

TouchKey configuration register (R8_TKEY_CFG)

Bit	Name	Access	Description	Reset value
[7:4]	Reserved	RO	Reserved.	0000b
3	RB_TKEY_PGA_ADJ	RW	Select the operating speed of PGA in ADC: 1: High speed but slightly larger power consumption;	0

			0: Normal speed.	
2	Reserved	RO	Reserved.	0
1	RB_TKEY_CURRENT	RO	TouchKey charge current select: 1: 60% current; 0: Rated current.	0
0	RB_TKEY_PWR_ON	RW	TouchKey module power enable control: 1: Enable; 0: Disable.	0

16.3 Touch-Key configuration

Please refer to and call related subprograms.

Chapter 17 USB controller

17.1 Introduction to USB controller

The chip is embedded with a USB host-slave controller and transceiver, the features are as follows:

- Support USB Host function and USB Device function.
- Support USB2.0 full-speed 12Mbps and low-speed 1.5Mbps.
- Support USB control transmission, bulk transmission, interrupt transmission, synchronous/real-time transmission.
- Support data packets up to 64 bytes, built-in FIFO, support interrupt and DMA.

17.2 Register description

USB registers are divided into 3 categories, some of which are multiplexed in host and device modes.
(1) USB global registers
(2) USB device control registers
(3) USB host control registers (only supported by CH573)

17.2.1 Global registers

Table 17-1 USB registers (those marked in grey are controlled by RB_UC_RESET_SIE reset)

Name	Access address	Description	Reset value
R8_USB_CTRL	0x40008000	USB control register	0x06
R8_USB_INT_EN	0x40008002	USB interrupt enable register	0x00
R8_USB_DEV_AD	0x40008003	USB device address register	0x00
R32_USB_STATUS	0x40008004	USB status register	0xXX20XXXX
R8_USB_MIS_ST	0x40008005	USB miscellaneous status register	0xXX
R8_USB_INT_FG	0x40008006	USB interrupt flag register	0x20
R8_USB_INT_ST	0x40008007	USB interrupt status register	0xXX
R8_USB_RX_LEN	0x40008008	USB reception length register	0xXX

USB control register (R8_USB_CTRL)

Bit	Name	Access	Description	Reset value
7	RB_UC_HOST_MODE	RW	USB working mode select bit: 1: HOST; 0: DEVICE.	0
6	RB_UC_LOW_SPEED	RW	USB bus signal transmission rate select bit: 1: 1.5Mbps; 0: 12Mbps.	0
5	RB_UC_DEV_PU_EN	RW	USB device enable and internal pull-up resistor control bit in USB device mode, if it is 1, USB device transmission is enabled and the internal pull-up resistor is also enabled. RB_PIN_USB_DP_PU can replace this bit.	0
[5:4]	MASK_UC_SYS_CTRL	RW	See the table below to configure the USB system.	00b
3	RB_UC_INT_BUSY	RW	Auto pause enable bit before USB transmission completion interrupt flag is not	0

			cleared: 1: It will automatically pause before the interrupt flag UIF_TRANSFER is not cleared. In device mode, it will automatically respond to busy NAK. In host mode, it will automatically pause subsequent transmission; 0: Not pause.	
2	RB_UC_RESET_SIE	RW	Software reset control bit of USB protocol processor: 1: Force to reset the USB protocol processor (SIE), software is needed to cleare; 0: Not reset.	1
1	RB_UC_CLR_ALL	RW	USB FIFO and interrupt flag clearing: 1: Force to empty and clear; 0: Not clear.	1
0	RB_UC_DMA_EN	RW	DMA and DMA interrupt control bit of USB: 1: Enable the DMA function and DMA interrupt; 0: Disable DMA.	0

RB_UC_HOST_MODE and MASK_UC_SYS_CTRL constitute the USB system control combination:

RB_UC_HOST_MODE	MASK_UC_SYS_CTRL	USB system control description
0	00	Disable USB device function and disable the internal pull-up resistor. Note: If RB_PIN_USB_DP_PU=1, the DP pull-up resistor will be enabled by force.
0	01	Enable USB device function and disable the internal pull-up resistor, the external pull-up is needed. Note: If RB_PIN_USB_DP_PU=1, the DP pull-up resistor will be enabled by force.
0	1x	Enable USB device function and enable the internal 1.5K pull-up resistor. The pull-up resistor has priority over the pull-down resistor, and can also be used in GPIO mode.
1	00	USB host mode, in normal working status.
1	01	USB host mode, DP/DM is forced to output SE0 status.
1	10	USB host mode, DP/DM is forced to output J status.
1	11	USB host mode, DP/DM is forced to output K status/wake-up.

USB interrupt enable register (R8_USB_INT_EN)

Bit	Name	Access	Description	Reset value
7	RB_UIE_DEV_SOF	RW	In USB device mode, receive SOF packet interrupt: 1: Enable interrupt; 0: Disable interrupt.	0

6	RB_UIE_DEV_NAK	RW	In USB device mode, receive NAK interrupt: 1: Enable interrupt; 0: Disable interrupt.	0
5	Reserved	RO	Reserved.	0
4	RB_UIE_FIFO_OV	RW	FIFO overflow interrupt: 1: Enable interrupt; 0: Disable interrupt.	0
3	RB_UIE_HST_SOF	RW	In the USB host mode, SOF timing interrupt: 1: Enable interrupt; 0: Disable interrupt.	0
2	RB_UIE_SUSPEND	RW	USB bus suspend or wake-up event interrupt: 1: Enable interrupt; 0: Disable interrupt.	0
1	RB_UIE_TRANSFER	RW	USB transfer completion interrupt: 1: Enable interrupt; 0: Disable interrupt.	0
0	RB_UIE_DETECT	RW	In USB host mode, USB device connection or disconnection event interrupt: 1: Enable interrupt; 0: Disable interrupt.	0
	RB_UIE_BUS_RST	RW	In USB device mode; USB bus reset event interrupt: 1: Enable interrupt; 0: Disable interrupt.	0

USB device address register (R8_USB_DEV_AD)

Bit	Name	Access	Description	Reset value
7	RB_UDA_GP_BIT	RW	USB general flag bit, user-defined.	0
[6:0]	MASK_USB_ADDR	RW	Host mode: address of USB device currently operated; Device mode: the address of the USB itself.	0000000b

USB miscellaneous status register (R8_USB_MIS_ST)

Bit	Name	Access	Description	Reset value
7	RB_UMS_SOF_PRES	RO	SOF packet indication status bit in USB host mode: 1: SOF packet will be sent, and it will be automatically delayed if there are other USB data packets; 0: No SOF package is sent.	X
6	RB_UMS_SOF_ACT	RO	SOF packet transmission status bit in USB host mode: 1: SOF packet is being sent out; 0: The transmission is completed or idle.	X
5	RB_UMS_SIE_FREE	RO	Idle status bit of USB protocol processor: 1: Idle; 0: Busy, USB transmission is in progress.	1
4	RB_UMS_R_FIFO_RDY	RO	USB receiver FIFO data ready status bit: 1: Receiver FIFO not empty; 0: Receiver FIFO empty.	0
3	RB_UMS_BUS_RESET	RO	USB bus reset status bit: 1: The current USB bus is at the reset status; 0: The current USB bus is at the non-reset status.	X

2	RB_UMS_SUSPEND	RO	USB suspend status bit: 1: The USB bus is in a suspended status, and there is no USB activity for a period of time; 0: USB bus is in the non-suspended status.	0
1	RB_UMS_DM_LEVEL	RO	In USB host mode, the level status of the DM pin when the device is just connected to the USB port, used to determine speed: 1: High level/ low speed; 0: Low level/ full speed.	0
0	RB_UMS_DEV_ATTACH	RO	USB device connection status bit of the port in USB host mode: 1: The port has been connected to a USB device; 0: No USB device is connected to the port.	0

USB interrupt flag register (R8_USB_INT_FG)

Bit	Name	Access	Description	Reset value
7	RB_U_IS_NAK	RO	In USB device mode, NAK ackowledge status bit: 1: NAK ackowledge during current USB transmission; 0: No NAK ackowledge.	0
6	RB_U_TOG_OK	RO	Current USB transmission DATA0/1 synchronous flag match status bit: 1: Synchronous; 0: Asynchronous.	0
5	RB_U_SIE_FREE	RO	USB protocol processor idle status bit: 1: Idle USB; 0: Busy, USB transmission is in progress.	1
4	RB_UIF_FIFO_OV	RW	USB FIFO overflow interrupt flag bit, write 1 to clear: 1: FIFO overflow trigger; 0: No event.	0
3	RB_UIF_HST_SOF	RW	SOF timing interrupt flag bit in USB host mode, write 1 to clear: 1: SOF packet transmission completion trigger; 0: No event.	0
2	RB_UIF_SUSPEND	RW	USB bus suspend or wake-up event interrupt flag bit, write 1 to clear: 1: USB suspend event or wake-up event trigger; 0: No event.	0
1	RB_UIF_TRANSFER	RW	USB transmission completion interrupt flag bit, write 1 to clear: 1: USB transmission completion trigger; 0: No event.	0
0	RB_UIF_DETECT	RW	In USB host mode, the USB device connection or disconnection event interrupt	0

			flag bit, write 1 to clear: 1: USB device connection or disconnection trigger is detected; 0: No event.	
	RB_UIF_BUS_RST	RW	USB bus reset event interrupt flag bit in USB device mode, write 1 to clear: 1: USB bus reset event trigger; 0: No event.	0

USB interrupt status register (R8_USB_INT_ST)

Bit	Name	Access	Description	Reset value
7	RB_UIS_SETUP_ACT	RO	In USB device mode, when this bit is 1, 8-byte SETUP request packet has been successfully received. SETUP token does not affect RB_UIS_TOG_OK, MASK_UIS_TOKEN, MASK_UIS_ENDP and R8_USB_RX_LEN.	0
6	RB_UIS_TOG_OK	RO	Current USB transmission DATA0/1 synchronization flag matching status bit, the same as RB_U_TOG_OK: 1: Synchronous; 0: Asynchronous.	0
[5:4]	MASK_UIS_TOKEN	RO	In device mode, the token PID of the current USB transfer transaction.	XXb
[3:0]	MASK_UIS_ENDP	RO	In device mode, the endpoint number of the current USB transfer transaction.	XXXXb
	MASK_UIS_H_RES	RO	In host mode, the response PID identification of the current USB transfer transaction. 0000: the device has no response or timeout; Other values: respond PID.	XXXXb

MASK_UIS_TOKEN is used to identify the token PID of the current USB transfer transaction in USB device mode: 00 represents OUT packet; 01 represents SOF packet; 10 represents IN packet; 11 represents idle.

When MASK_UIS_TOKEN is not idle, and RB_UIS_SETUP_ACT is also 1, it is required to process the former first, and clear RB_UIF_TRANSFER once after the former is processed to make the former enter the idle status, and then process the latter, and finally clear RB_UIF_TRANSFER again.

MASK_UIS_H_RES is only valid in host mode. In host mode, if the host sends OUT/SETUP token packet, the PID will be the handshake packet ACK/NAK/STALL, or that device has no response/timeout. If the host sends IN token packet, the PID will the PID of the data packet (DATA0/DATA1) or the handshake packet PID.

USB reception length register (R8_USB_RX_LEN)

Bit	Name	Access	Description	Reset value
[7:0]	R8_USB_RX_LEN	RO	The number of data bytes received by the current USB endpoint.	XXh

17.2.2 Device registers

In USB device mode, the chip provides 5 sets of bidirectional endpoints
endpoint0
endpoint1
endpoint2
endpoint3
endpoint4.

The maximum data packet length of each endpoint is 64 bytes.

Endpoint0 is the default endpoint and supports control transmission. The transmission and reception share a 64-byte data buffer.

Endpoint1, endpoint2 and endpoint3 each include a transmission endpoint IN and a reception endpoint OUT. The reception and the transmission each has a separate 64-byte or double 64-byte data buffer, supporting bulk transmission, interrupt transmission, and real-time/synchronous transmission.

Endpoint4 includes a transmission endpoint IN and a reception endpoint OUT. The reception and the transmission each has a separate 64-byte data buffer, supporting bulk transmission, interrupt transmission, and real-time/synchronous transmission.

Each set of endpoint has a control register R8_UEPn_CTRL and a transmit length register R8_UEPn_T_LEN (n=0/1/2/3/4), used to set the synchronization trigger bit of endpoint, the response to OUT transactions and IN transactions and the length of data to be sent.

As the necessary USB bus pull-up resistor of USB device, it can be set whether to be enabled by software at any time. When RB_UC_DEV_PU_EN of USB control register R8_USB_CTRL is set to 1, the controller will set according to the speed of RB_UD_LOW_SPEED, internally connect the pull-up resistor with the DP/DM pin of the USB bus and enable the USB device function. The above control cannot be used in sleep or power-down mode, but RB_PIN_USB_DP_PU of R16_PIN_ANALOG_IE can enable the pull-up resistor of DP pin by force without being affected by sleep mode.

When a USB bus reset or USB bus suspend or wake-up event is detected, or when the USB successfully processes data sending or receiving, the USB protocol processor will set corresponding interrupt flag. If the interrupt enabling is switched on, the corresponding interrupt request will also be generated. The application program can directly query and analyze the interrupt flag register R8_USB_INT_FG in the USB interrupt service program, and perform corresponding processing according to RB_UIF_BUS_RST and RB_UIF_SUSPEND. In addition, if RB_UIF_TRANSFER is valid, it is required to continue to analyze the USB interrupt state register R8_USB_INT_ST, and perform the corresponding processing according to the current endpoint number MASK_UIS_ENDP and the current transaction token PID identification MASK_UIS_TOKEN. If the synchronization trigger bit RB_UEP_R_TOG of OUT transaction of each endpoint is set in advance, RB_U_TOG_OK or RB_UIS_TOG_OK can be used to judge whether the synchronization trigger bit of the data packet received matches the synchronization trigger bit of the endpoint. If the data is synchronous, the data is valid. If the data is not synchronous, the data should be discarded. Every time the USB sending or receiving interrupt is processed, the synchronization trigger bit of corresponding endpoint should be modified correctly to detect whether the data packet sent next time and the data packet received next time are synchronous. In addition, RB_UEP_AUTO_TOG can be set to automatically flip the corresponding synchronization trigger bit after sending or receiving successfully.

The data to be sent by each endpoint is in their own buffer, and the length of the data to be sent is independently set in R8_UEPn_T_LEN. The data received by each endpoint is in their own buffer, but the length of the data received is in the USB length receiving register R8_USB_RX_LEN, and it can be distinguished according to the current endpoint number when USB receives an interrupt.

Table 17 USB device registers (those marked in grey are controlled by RB_UC_RESET_SIE reset)

Name	Access address	Description	Reset value
R8_UDEV_CTRL	0x40008001	USB device physical port control register	0xX0
R8_UEP4_1_MOD	0x4000800c	Endpoint 1/4 mode control register	0x00
R8_UEP2_3_MOD	0x4000800d	Endpoint 2/3 mode control register	0x00
R16_UEP0_DMA	0x40008010	Start address of endpoint0 buffer	0xXXXX
R16_UEP1_DMA	0x40008014	Start address of endpoint1 buffer	0xXXXX
R16_UEP2_DMA	0x40008018	Start address of endpoint2 buffer	0xXXXX
R16_UEP3_DMA	0x4000801c	Start address of endpoint3 buffer	0xXXXX
R8_UEP0_T_LEN	0x40008020	Endpoint0 transmission length register	0xXX
R8_UEP0_CTRL	0x40008022	Endpoint0 control register	0x00
R8_UEP1_T_LEN	0x40008024	Endpoint1 transmission length register	0xXX
R8_UEP1_CTRL	0x40008026	Endpoint1 control register	0x00
R8_UEP2_T_LEN	0x40008028	Endpoint2 transmission length register	0xXX
R8_UEP2_CTRL	0x4000802a	Endpoint2 control register	0x00
R8_UEP3_T_LEN	0x4000802c	Endpoint3 transmission length register	0xXX
R8_UEP3_CTRL	0x4000802e	Endpoint3 control register	0x00
R8_UEP4_T_LEN	0x40008030	Endpoint4 transmission length register	0xXX
R8_UEP4_CTRL	0x40008032	Endpoint4 control register	0x00

USB device physical port control register (R8_UDEV_CTRL)

Bit	Name	Access	Description	Reset value
7	RB_UD_PD_DIS	RW	Internal pull-down resistor control bit of UD+/UD- pin of USB device port: 1: Disable internal pull-down; 0: Enable internal pull-down. It also can be used in GPIO mode to provide pull-down resistor.	1
6	Reserved	RO	Reserved.	0
5	RB_UD_DP_PIN	RO	Current UD + pin status: 1: High level; 0: Low level.	X
4	RB_UD_DM_PIN	RO	Current UD- pin status: 1: High level; 0: Low level.	X
3	Reserved	RO	Reserved.	0
2	RB_UD_LOW_SPEED	RW	USB device physical port low-speed mode enable bit: 1: Select 1.5Mbps low-speed mode; 0: Select 12Mbps full-speed mode.	0
1	RB_UD_GP_BIT	RW	USB device mode general flag bit, user-defined.	0
0	RB_UD_PORT_EN	RW	USB device physical port enable bit: 1: Enable the physical port; 0: Disable the physical port.	0

Endpoint 1/4 mode control register (R8_UEP4_1_MOD)

Bit	Name	Access	Description	Reset value
7	RB_UEP1_RX_EN	RW	1: Enable endpoint 1 reception (OUT); 0: Disable endpoint 1 reception.	0
6	RB_UEP1_TX_EN	RW	1: Enable endpoint 1 transmission (IN); 0: Disable endpoint 1 transmission.	0
5	Reserved	RO	Reserved.	0
4	RB_UEP1_BUF_MOD	RW	Endpoint 1 data buffer mode control bit.	0
3	RB_UEP4_RX_EN	RW	1: Enable endpoint 4 reception (OUT); 0: Disable endpoint 4 reception.	0
2	RB_UEP4_TX_EN	RW	1: Enable endpoint 4 transmission (IN); 0: Disable endpoint 4 transmission.	0
[1:0]	Reserved	RO	Reserved.	0

The data buffer modes of USB endpoint0 and endpoint4 are configured by a combination of bUEP4_RX_EN and bUEP4_TX_EN. Refer to the following table for details:

Table 17-3 Endpoint0/4 buffer modes

bUEP4_RX_EN	bUEP4_TX_EN	Description: arrange from low to high with UEP0 DMA as the start address
0	0	Endpoint 0 single 64-byte transceiving shared buffers (IN and OUT).
1	0	Endpoint 0 single 64-byte transceiving shared buffers; endpoint 4 single 64-byte reception buffers (OUT).
0	1	Endpoint 0 single 64-byte transceiving shared buffers; endpoint 4 single 64-byte transmission buffers (IN).
1	1	Endpoint 0 single 64-byte transceiving shared buffers; endpoint4 single 64-byte reception buffer (OUT); Endpoint 4 single 64-byte reception buffer areas (IN). All 192 bytes are arranged as follows: UEP0_DMA+0 address: 64-byte start address of endpoint0 receive/transmit shared buffer area; UEP0_DMA+64 address: 64-byte start address of endpoint4 reception buffer area; UEP0_DMA+128 address: 64-byte start address of endpoint4 transmission buffer area.

Endpoint 2/3 mode control register (R8_UEP2_3_MOD):

Bit	Name	Access	Description	Reset value
7	RB_UEP3_RX_EN	RW	1: Enable endpoint 3 reception (OUT); 0: Disable endpoint 3 reception.	0
6	RB_UEP3_TX_EN	RW	1: Enable endpoint 3 transmission (IN); 0: Disable endpoint 3 transmission.	0
5	Reserved	RO	Reserved.	0
4	RB_UEP3_BUF_MOD	RW	Endpoint 3 data buffer mode control bit.	0
3	RB_UEP2_RX_EN	RW	1: Enable endpoint 2 reception (OUT); 0: Disable endpoint 2 reception.	0
2	RB_UEP2_TX_EN	RW	1: Enable endpoint 2 transmission (IN);	0

			0: Disable endpoint 2 transmission.	
1	Reserved	RO	Reserved.	0
0	RB_UEP2_BUF_MOD	RW	Endpoint 2 data buffer mode control bit.	0

The data buffer modes of USB endpoint1/2/3 are controlled by a combination of RB_UEPn_RX_EN, RB_UEPn_TX_EN and RB_UEPn_BUF_MOD(n=1/2/3) respectively, refer to the following table for details. Among them, in the double 64-byte buffer mode, the first 64-byte buffer will be selected based on RB_UEP_*_TOG=0 and the last 64-byte buffer will be selected based on RB_UEP_*_TOG=1 during USB data transmission, and RB_UEP_AUTO_TOG=1 is set to realize automatic switch.

Table 17-4 Endpointn buffer modes (n=1/2/3)

RB_UEPn_ RX_EN	RB_UEPn_ TX_EN	RB_UEPn_ BUF_MOD	Description: Arrange from low to high with R16_UEPn_DMA as the start address
0	0	X	Endpoint is disabled, and R16_UEPn_DMA buffer is not used.
1	0	0	Single 64-byte reception buffer (OUT).
1	0	1	Double 64-byte reception buffer (OUT), selected by RB_UEP_R_TOG.
0	1	0	Single 64-byte transmission buffer (IN).
0	1	1	Double 64-byte transmission buffer (IN), selected by RB_UEP_T_TOG.
1	1	0	Single 64-byte reception buffer (OUT), single 64-byte transmission buffer (IN).
1	1	1	Double 64-byte reception buffer (OUT), selected by RB_UEP_R_TOG. Double 64-byte transmission buffer (IN), selected by RB_UEP_T_TOG. All 256 bytes are arranged as follows: UEPn_DMA+0 address: endpoint reception address when RB_UEP_R_TOG=0; UEPn_DMA+64 address: endpoint reception address when RB_UEP_R_TOG=1; UEPn_DMA+128 address: endpoint transmission address when RB_UEP_T_TOG=0; UEPn_DMA+192 address: endpoint transmission address when RB_UEP_T_TOG=1.

Endpoint n buffer start address (R16_UEPn_DMA) (n=0/1/2/3)

Bit	Name	Access	Description	Reset value
[15:0]	R16_UEPn_DMA	RW	Endpoint n buffer start address. Lower 14 bits are valid, and the address must be 4-byte aligned.	XXXXh

Note: The length of the buffer that receives data >= min (maximum data packet length possibly received + 2 bytes, 64 bytes)

Endpoint n transmission length register (R8_UEPn_T_LEN) (n=0/1/2/3/4)

Bit	Name	Access	Description	Reset value
[7:0]	R8_UEPn_T_LEN	RW	Set the number of data bytes that USB	XXh

			endpoint n is ready to send.	

Endpoint n control register (R8_UEPn_CTRL) (n=0/1/2/3/4)

Bit	Name	Access	Description	Reset value
7	RB_UEP_R_TOG	RW	Expected synchronization trigger bit of the receiver (process OUT transactions) of USB endpoint n: 1: Expect DATA1; 0: Expect DATA0.	0
6	RB_UEP_T_TOG	RW	Synchronization trigger bit of the transmitter (process IN transactions) of USB endpoint n 1: Send DATA1; 0: Send DATA0.	0
5	Reserved	RO	Reserved.	0
4	RB_UEP_AUTO_TOG	RW	Synchronization trigger bit auto flip enable control bit: 1: After the data is sent or received successfully, the corresponding synchronization trigger bit is automatically flipped; 0: It is not flipped automatically, but can be switched manually. It only supports endpoint 1/2/3.	0
[3:2]	MASK_UEP_R_RES	RW	Control on the response to OUT transactions by the receiver of USB endpoint n: 00: Respond ACK; 01: Timeout/no response, used for real-time/synchronous transmission of non-endpoint 0; 10: Respond to NAK or busy; 11: Respond to STALL or error.	00b
[1:0]	MASK_UEP_T_RES	RW	Control on response to IN transactions of the transmitter of endpoint n: 00: DATA0/DATA1 data is ready and ACK is expected; 01: Respond to DATA0/DATA1 and expect no response, used for real-time/synchronous transmission of non-endpoint 0; 10: Respond to NAK or busy; 11: Respond to STALL or error.	00b

17.2.3 Host registers

In USB host mode, the chip provides 1 set of bidirectional host endpoints, including a transmission endpoint OUT and a reception endpoint IN. The maximum length of data packet is 64 bytes. It supports control transmission, interrupt transmission, bulk transmission and real-time/synchronous transmission.

Each USB transaction initiated by host endpoint always automatically sets the RB_UIF_TRANSFER interrupt flag after the processing ends. The application program can directly query or query and analyze the

interrupt flag register R8_USB_INT_FG in the USB interrupt service program, and perform corresponding processing according to each interrupt flag. In addition, if RB_UIF_TRANSFER is valid, it is required to continue to analyze the USB interrupt status register R8_USB_INT_ST, and perform the corresponding processing according to the response PID identification MASK_UIS_H_RES of the current USB transmission transaction.

If the synchronization trigger bit RB_UH_R_TOG of IN transaction of host reception endpoint is set in advance, whether the synchronization trigger bit of the data packet received matches the synchronization trigger bit of the endpoint can be judged through RB_U_TOG_OK or RB_UIS_TOG_OK. If the data is synchronous, the data is valid. If the data is not synchronous, the data should be discarded. Each time the USB sending or receiving interrupt is processed, the synchronization trigger bit of corresponding host endpoint should be modified correctly to synchronize the data packet sent next time and detect whether the data packet received next time is synchronous. In addition, RB_UH_T_AUTO_TOG and RB_UH_R_AUTO_TOG can be set to automatically flip the corresponding synchronization trigger bit after successfully sending or receiving.

USB host token setting register R8_UH_EP_PID is used to set the endpoint number of the target device being operated on and the token PID packet identification of the USB transmission transaction. The data corresponding to the SETUP token and OUT token is provided by the host transmission endpoint. The data to be sent is in the R16_UH_TX_DMA buffer, and the length of the data to be sent is set in R16_UH_TX_LEN. The data corresponding to the IN token is returned by the target device to the host reception endpoint, the data received is stored in the R16_UH_RX_DMA buffer, and the length of data received is stored in R8_USB_RX_LEN.

Table 17-5 USB host registers (those marked in grey are controlled by RB_UC_RESET_SIE reset)

Name	Access address	Description	Reset value
R8_UHOST_CTRL	0x40008001	USB host physical port control register	0xX0
R8_UH_EP_MOD	0x4000800d	USB host endpoint mode control register	0x00
R16_UH_RX_DMA	0x40008018	USB host receive buffer start address	0xXXXX
R16_UH_TX_DMA	0x4000801c	USB host transmit buffer start address	0xXXXX
R8_UH_SETUP	0x40008026	USB host auxiliary setting register	0x00
R8_UH_EP_PID	0x40008028	USB host token setting register	0x00
R8_UH_RX_CTRL	0x4000802a	USB host reception endpoint control register	0x00
R8_UH_TX_LEN	0x4000802c	USB host transmission length register	0xXX
R8_UH_TX_CTRL	0x4000802e	USB host transmission endpoint control register	0x00

USB host physical port control register (R8_UHOST_CTRL)

Bit	Name	Access	Description	Reset value
7	RB_UH_PD_DIS	RW	Internal pull-down resistor control bit of UD+/UD- pin of USB host port: 1: Disable internal pull-down; 0: Enable internal pull-down. It can be used in GPIO mode to provide pull-down resistor.	1
6	Reserved	RO	Reserved.	0
5	RB_UH_DP_PIN	RO	Current UD + pin status: 1: High level; 0: Low level.	X

4	RB_UH_DM_PIN	RO	Current UD- pin status: 1: High level; 0: Low level.	X
3	Reserved	RO	Reserved.	0
2	RB_UH_LOW_SPEED	RW	USB host port low-speed mode enable bit: 1: Select 1.5Mbps low-speed mode; 0: Select 12Mbps full-speed mode.	0
1	RB_UH_BUS_RESET	RW	The USB host mode bus reset control bit: 1: Output USB bus reset by force; 0: End output.	0
0	RB_UH_PORT_EN	RW	USB host port enable bit: 1: Enable the host port; 0: Disable the host port. The bit is automatically cleared to 0 when the USB device is disconnected.	0

USB host endpoint mode control register (R8_UH_EP_MOD)

Bit	Name	Access	Description	Reset value
7	Reserved	RO	Reserved.	0
6	RB_UH_EP_TX_EN	RW	Host transmission endpoint transmit (SETUP/OUT) enable bit: 1: Enable endpoint transmission; 0: Disable endpoint transmission.	0
5	Reserved	RO	Reserved.	0
4	RB_UH_EP_TBUF_MOD	RW	Host transmission endpoint transmit data buffer mode control bit.	0
3	RB_UH_EP_RX_EN	RW	Host reception endpoint receive (IN) enable bit: 1: Enable endpoint reception; 0: Disable endpoint reception.	0
[2:1]	Reserved	RO	Reserved.	00b
0	RB_UH_EP_RBUF_MOD	RW	USB host reception endpoint receive data buffer mode control bit.	0

The host transmission endpoint data buffer modes are controlled by a combination of RB_UH_EP_TX_EN and RB_UH_EP_TBUF_MOD, refer to the following table.

Table 17-6 Host transmit buffer modes

RB_UH_EP_TX_EN	RB_UH_EP_TBUF_MOD	Description: Take R16_UH_TX_DMA as start address
0	X	Endpoint is disabled, and R16_UH_TX_DMA buffer is not used.
1	0	Single 64-byte transmission buffer (SETUP/OUT).
1	1	Double 64-byte transmission buffer, selected by RB_UH_T_TOG: When RB_UH_T_TOG=0, select the first 64-byte buffer; When RB_UH_R_TOG=1, select the last 64-byte buffer.

The USB host reception endpoint data buffer modes are controlled by a combination of

RB_UH_EP_RX_EN and RB_UH_EP_RBUF_MOD, refer to the following table.

Table 17-7 Host receive buffer modes

RB_UH_EP_RX_EN	RB_UH_EP_RBUF_MOD	Description: Take R16_UH_TX_DMA as start address
0	X	Endpoint is disabled, and the R16_UH_RX_DMA buffer is not used.
1	0	Single 64-byte reception buffer (IN).
1	1	Double 64-byte reception buffer, selected by RB_UH_R_TOG: When RB_UH_R_TOG=0, select the first 64-byte buffer; When RB_UH_R_TOG=1, select the last 64-byte buffer.

USB host receive buffer start address (R16_UH_RX_DMA)

Bit	Name	Access	Description	Reset value
[15:0]	R16_UH_RX_DMA	RW	Host endpoint data receive buffer start address. The lower 14 bits are valid, and the address must be 4 bytes aligned.	XXXXb

USB host transmit buffer start address (R16_UH_TX_DMA)

Bit	Name	Access	Description	Reset value
[15:0]	R16_UH_TX_DMA	RW	Host endpoint data transmit buffer start address. The lower 14 bits are valid, and the address must be 4 bytes aligned.	XXXXb

USB host auxiliary setting register (R8_UH_SETUP)

Bit	Name	Access	Description	Reset value
7	RB_UH_PRE_PID_EN	RW	Low-speed preamble packet PRE PID enable bit: 1: Enable, used to communicate with low-speed USB device through an external HUB. 0: Disable the low-speed preamble packet.	0
6	RB_UH_SOF_EN	RW	Automatically generate SOF packet enable bit: 1: The host automatically generates SOF packet; 0: The host does not automatically generate SOF packet, but can generate manually.	0
[5:0]	Reserved	RO	Reserved.	000000b

USB host token setting register (R8_UH_EP_PID)

Bit	Name	Access	Description	Reset value
[7:4]	MASK_UH_TOKEN	RW	Set the token PID packet identification of this USB transmission transaction.	0000b
[3:0]	MASK_UH_ENDP	RW	Set the endpoint number of the target device being operated this time.	0000b

USB host reception endpoint control register (R8_UH_RX_CTRL)

Bit	Name	Access	Description	Reset value
7	RB_UH_R_TOG	RW	Synchronization trigger bit expected by USB host receiver (process IN transaction): 1: Expect DATA1; 0: Expect DATA0.	0
[6:5]	Reserved	RO	Reserved.	00b
4	RB_UH_R_AUTO_TOG	RW	Synchronization trigger bit auto flip enable control bit: 1: After the data is successfully received, the corresponding expected synchronization trigger bit (RB_UH_R_TOG) is automatically flipped; 0: It is not flipped automatically, but can be switched manually.	0
3	Reserved	RO	Reserved.	0
2	RB_UH_R_RES	RW	Control on response to IN transactions by host receiver: 1: No response, used for real-time/synchronous transmission of non-endpoint 0; 0: Respond to ACK.	0
[1:0]	Reserved	RO	Reserved.	00b

USB host transmission length register (R8_UH_TX_LEN)

Bit	Name	Access	Description	Reset value
[7:0]	R8_UH_TX_LEN	RW	Set the number of data bytes that USB host transmission endpoint is ready to send.	XXh

USB host transmission endpoint control register (R8_UH_TX_CTRL)

Bit	Name	Access	Description	Reset value
7	Reserved	RO	Reserved.	0
6	RB_UH_T_TOG	RW	Synchronization trigger bit prepared by USB host transmitter (process SETUP/OUT transactions): 1: Send DATA1; 0: Send DATA0.	0
5	Reserved	RO	Reserved.	0

4	RB_UH_T_AUTO_TOG	RW	Synchronization trigger bit auto flip enable control bit: 1: The corresponding synchronization trigger bit (RB_UH_T_TOG) is flipped after the data is sent successfully; 0: It is not flipped automatically, but can be switched manually.	0
[3:1]	Reserved	RO	Reserved.	000b
0	RB_UH_T_RES	RW	Response control bit of USB host transmitter to SETUP/OUT transaction: 1: Expect no response, used for real-time/synchronous transmission of non-endpoint 0; 0: Expect to respond to ACK.	0

Chapter 18 Reserved

Chapter 19 Wireless communication

19.1 Introduction

The chip integrates low-power 2.4-GHz wireless communication modules, including RF transceiver, baseband, link control and antenna matching network. Bluetooth Low Energy (BLE) is supported. More than 100 registers are provided internally to adjust parameters, control process and status. This datasheet does not provide a detailed description of registers. The underlying operations of wireless communication mainly provide application support with subroutine libraries.

Main features:

- Integrated with 2.4GHz RF transceiver, BaseBand and LLE link control.
- Bluetooth Low Energy (BLE) is supported, and compatible with Bluetooth Low Energy 4.2 specifications.
- Single-ended RF interface and simplified board design.
- Typical: -96dBm RX sensitivity. For CH573Q and CH571K, the RX sensitivity is -93dBm as they are limited by the package.
- Programmable TX power from -20dBm to +5dBm, and dynamic adjustment is supported.
- When using the PCB onboard antenna, the wireless communication distance is about 170 meters at the 0dBm TX power, and it is about 240 meters at 3dBm TX power.
- After converted by built-in DC-DC, the current is more than 6mA at 0dBm TX power.
- AES encryption and decryption.
- DMA capability.
- Optimized communication protocol stack and application layer API, and support networking.
- Support the upper computer development under various mainstream operating systems, providing API and APP under each OS.

19.2 LLE module

LLE module supports automatic transceiving mode and manual transceiving mode, and 5 sets of independent hardware timers can control the time point of any process of sending and receiving data.

19.3 DMA module

The controller has 2 sets of DMA, and each set of DMA has 2 channels. The 2 channels of DMA0 are used to send and receive data respectively, and the 2 channels of DMA2 are used in automatic mode. In automatic transmission mode, the address of sending DMA and the address of receiving DMA can be configured at the same time, so configuration is not needed during the frame interval.

19.4 BB module

19.5 AES module

Please conduct specific applications base on BLE protocol stack library and refer to the BLE application examples provided.

Chapter 20 Parameters

20.1 Absolute maximum ratings

Operating in critical ratings or exceeding the absolute maximum ratings may cause the chip to work abnormally or even be damaged.

Table 20-1 Absolute maximum ratings

Symbol	Parameter description	Min.	Max.	Unit
TA	Ambient temperature during operation	-40	85	℃
TS	Ambient temperature during storage	-40	125	℃
VDD33	System supply voltage (VDD33 is connected to power, GND is connected to ground)	-0.4	4.2	V
VIO33	I/O supply voltage (VIO33 is connected to power, GND is connected to ground)	-0.4	4.2	V
VIO	Voltage on input/output pins	-0.4	VIO33+0.4	V
VIO5	Voltage on input/output pins that support 5V withstand voltage	-0.4	5.5	V
VDCI	Voltage on VDCID/VDCIA pin (if external DC-DC is used)	-0.4	VDD33+0.4	V
VXCK	Voltage on PA10/PA11 after X32MI/X32MO/ enabling LSE	-0.3	1.4	V

20.2 Electrical characteristics

Test conditions: TA=25°C, VDD33=VIO33=3.3V, Fsys=16MHz.

Table 20-2 Electrical characteristics

Symbol	Parameter description		Min.	Typ.	Max.	Unit
VDD33	System supply voltage @VDD33	CH573X	1.7	3.3	3.6	V
		Non-CH573X	2.3	3.3	3.6	V
VIO33	I/O supply voltage @VIO33	CH573X	1.7	3.3	3.6	V
		Non-CH573X	2.3	3.3	3.6	V
VIN5	5V supply voltage @VIN5	CH573X	4.5	5	5.3	V
ICC_8	Straight-through static supply current Condition: codes run in RAM. Add 5mA if running in Flash.	Fsys=8M		1.8		mA
ICC_{16}		Fsys=16M		2.0		mA
ICC_{48}		Fsys=48M		6.3		mA
$IDDC_8$	Static supply current after enabling the built-in DC-DC Condition: codes run in RAM. Add 4mA if running in Flash.	Fsys=8M		1.4		mA
$IDDC_{16}$		Fsys=16M		1.5		mA
$IDDC_{48}$		Fsys=48M		5.4		mA
VIL	GPIO input low level voltage		0		0.9	V
VIH	GPIO input high level voltage		2.0		VIO33	V
VIL5	GPIO that supports 5V withstand voltage input		0		0.9	V

	low level voltage					
VIH5	GPIO that supports 5V withstand voltage input high level voltage		2.0		5.0	V
VOL	Output low level voltage (5mA/20mA input current)		0	0.3	0.4	V
VOH	Uutput high level voltage (5mA/20mA output current)		VIO33-0.4	VIO33-0.3	VIO33	V
IIN	Input current of GPIO floating input		-3	0	3	uA
IUP	Input current of GPIO with built-in pull-up resistor		25	60	90	uA
IDN	Input current of GPIO with built-in pull-down resistor		-90	-60	25	uA
Vref	Voltage on VINTA pin (ADC reference voltage)		1.035	1.05	1.065	V
Vdci	Voltage on VDCID pin after DC-DC is enabled		1.28	1.32	1.38	V
Vlvr	Low-voltage reset threshold	CH573X	1.3	1.5	1.7	V
		Non-CH573X	1.8	2.05	2.3	V

20.3 Power consumption in low-power modes

Test conditions: TA=25°C, VDD33=VIO33=3.3V, Fsys=16MHz.

Table 20-3 Low power parameters (for reference only, related to temperature)

Low-power mode	Min.	Typ.	Max.	Unit
Idle mode, enable the clock combination of each module	1.2	1.5	1.7	mA
Halt mode, disable all clocks		320		uA
Sleep mode, multiple combinations, refer to Table 5-3		1.4~6.0		uA
Sleep mode, PMU+core+RAM2K, GPIO wakes up, no RTC		1.4		uA
Shutdown mode, multiple combinations, refer to Table 5-3		0.3~1.3		uA
Shutdown mode, only PMU, reset after GPIO wakes up, no RTC		0.3		uA

Table 20-4 Current on modules (for reference only, related to temperature)

Name	Parameter description	Min.	Typ.	Max.	Unit
$I_{DD(RAM2K)}$	RAM2K:2KB SRAM		0.7		uA
$I_{DD(RAM16K)}$	RAM16K:16KB SRAM		4.0		uA
$I_{DD(LSI)}$	Internal LSI oscillator		0.3		uA
$I_{DD(LSE)}$	External LSE oscillator		0.4		uA
$I_{DD(HSE)}$	External HSE oscillator	100	200	300	uA
$I_{DD(BM)}$	Low-power battery low-voltage monitor module (BM)		0.9		uA
$I_{DD(BD)}$	High-precision battery low-voltage detector module (BD)		100		uA
$I_{DD(PLL)}$	Internal PLL oscillator		150		uA

$I_{DD(ADC)}$	ADC module				0.4		mA
$I_{DD(TKEY)}$	TouchKey module				0.1		mA
$I_{DD(TS)}$	Temperature sensor module (TS)				0.1		mA
$I_{DD(USB)}$	USB module		Not in transmit status	1.2	1.6	2.0	mA
			Transmit Status		3		mA
$I_{DD(BLE)}$	BLE	Receiving	Direct power		11		mA
			DC-DC enabled		6		mA
		-20dBm TX power	Direct power		5		mA
			DC-DC enabled		2		mA
		0dBm TX power	Direct power		10		mA
			DC-DC enabled		4.5		mA
		+3dBm TX power	Direct power		12.5		mA
			DC-DC enabled		5.5		mA

20.4 Clock source

Table 20-5 High-speed oscillator (HSE)

Symbol	Parameter description	Min.	Typ.	Max.	Unit
F_{HSE}	External HSE oscillator frequency (wireless communication disabled)	24	32	36	MHz
T_{SUHSE}	External HSE oscillator startup to available time	80	200	500	uS
T_{STHSE}	External HSE oscillator startup to stabilization time	200	500	3000	uS

Table 20-6 Low-speed oscillator (LSI and LSE)

Symbol	Parameter description		Min.	Typ.	Max.	Unit
F_{LSIR}	Internal LSI oscillator frequency (before calibration)		20K	32K	48K	Hz
F_{LSI}	Internal LSI frequency (after calibration when application software is running)		32716	32768	32820	Hz
A_{LSI}	Accuracy of LSI oscillator (After software calibration)	TA=-40℃～85℃		0.1	0.3	%
		TA=0℃～60℃		0.05	0.1	%
T_{SULSI}	Internal LSI oscillator startup to stabilization time			40	100	uS
T_{SULSE}	External LSE oscillator startup to available time		100	300	1500	mS
T_{STLSE}	External LSE oscillator startup to stabilization time		500	1500	5000	mS

Table 20-7 PLL characteristics

Symbol	Parameter description	Min.	Typ.	Max.	Unit
F_{PLL}	Output clock after PLL (CK32M * 15)		480		MHz
T_{PLLLK}	PLL lock time		15	30	uS

20.5 Timing characteristics

Test conditions: TA=25°C, VDD33=VIO33=3.3V, Fsys=6.4MHz.

Table 20-8 Timing characteristics

Symbol	Parameter description		Min.	Typ.	Max.	Unit
T_{rpor}	Reset delay after RPOR		11	15	20	mS
T_{rst}	RST# valid signal width			100		nS
T_{mr}	Reset delay after MR		2	8	18	uS
T_{sr}	Reset delay after SR		2	8	18	uS
T_{wtr}	Reset delay after WTR		10	12	18	uS
T_{WAK}	Wakeup time to exit from low-power status	Idle Mode	0.6	1	3	uS
		Halt Mode	T_{SUHSE}+60	T_{SUHSE}+80	T_{SUHSE}+150	uS
		Sleep Mode	T_{SUHSE}+200	T_{SUHSE}+300	T_{SUHSE}+400	uS
		Shutdown Mode	T_{SUHSE}+0.4	T_{SUHSE}+1	T_{SUHSE}+5	mS

Note: The delay parameters in the table are all based on multiples of Tsys, and the delay will be increased when the clock frequency is reduced.

The delay parameters in the above table are based on the use of an external HSE clock source. If an external HSE clock source is used during sleep, the delay parameter T_{WAK} in Halt mode/Sleep mode/Shutdown mode in the table will be increased by about 0.2-1mS (startup to available, T_{SUHSE}).

20.6 Other parameters

Test conditions: TA=25°C, VDD33=VIO33=3.3V, Fsys=16MHz.

Table 20-9 Other parameters

Symbol	Parameter description		Min.	Typ.	Max.	Unit
R_{TS}	Measurement range of temperature sensor		-40		85	°C
A_{TSC}	Measurement error of temperature sensor after calibrated by software			±10		°C
T_{FRER}	Single sector erase operation time of Flash-ROM		6	9	13	mS
T_{FRPG}	Single word program operation time of Flash-ROM		1	2	4	mS
N_{EPCE}	Erase/program cycle endurance	5～45°C	100K	1000K (random test)		times
		-40～85°C	50K	200K (random test)		
T_{DR}	Data hold capability of Flash-ROM		20			years
V_{ESD}	ESD withstand voltage on I/O pins	Antenna (ANT)	2K	4K (random test)		V
		I/O pins: PA and PB	4K	6K (random test)		V

Chapter 21 Package

Packages

Package	Body size	Lead pitch		Description	Part No.
QFN32	4*4mm	0.4mm	15.7mil	Quad no-lead 32-pin	CH573X
QFN28	4*4mm	0.4mm	15.7mil	Quad no-lead 28-pin	CH573F
LQFP32	7*7mm	0.8mm	31.5mil	Standard LQFP 32-pin patch	CH573Q
QFN28	4*4mm	0.4mm	15.7mil	Quad no-lead 28-pin	CH571F
QFN20	3*3mm	0.4mm	15.7mil	Quad no-lead 20-pin	CH571D
ESSOP10	3.9mm	1.0mm	39mil	Shrink small outline package with EPAD 10pin patch	CH571K

Notes: All dimensions are in millimeters. The pin center spacing values are nominal values, and the error of other dimensions is not more than ±0.2mm.

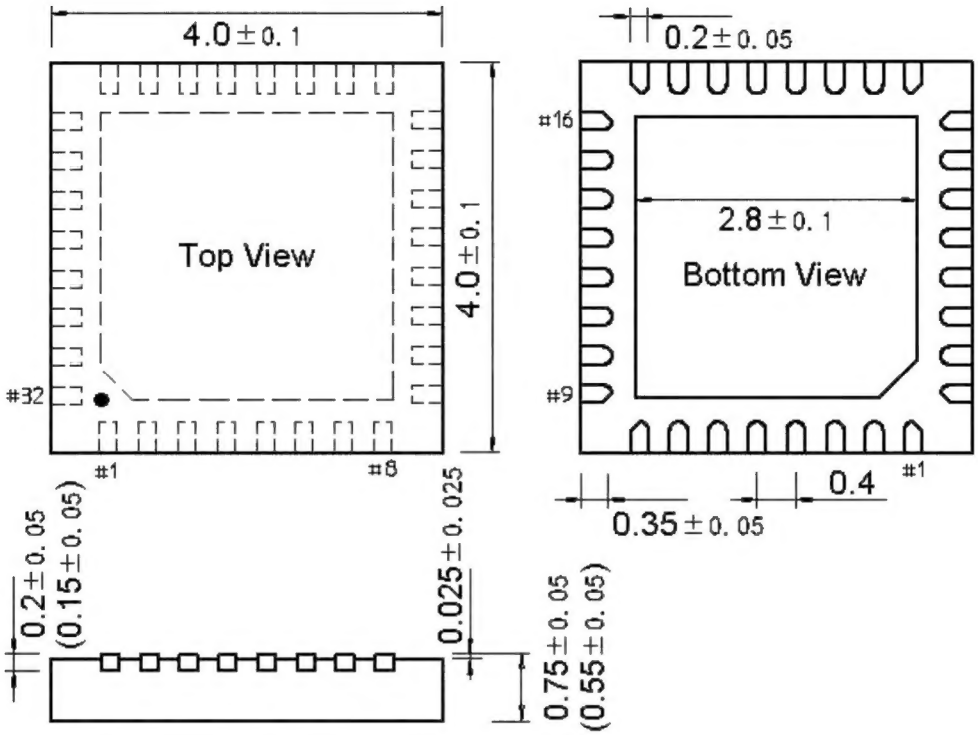

QFN32_4X4

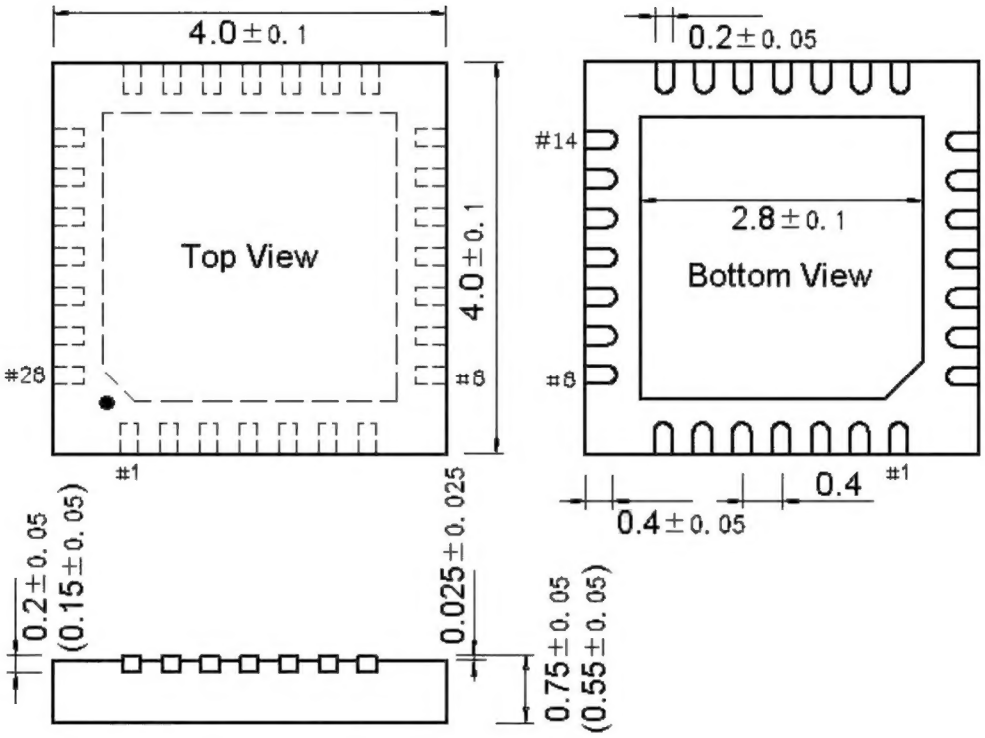

QFN28_4X4

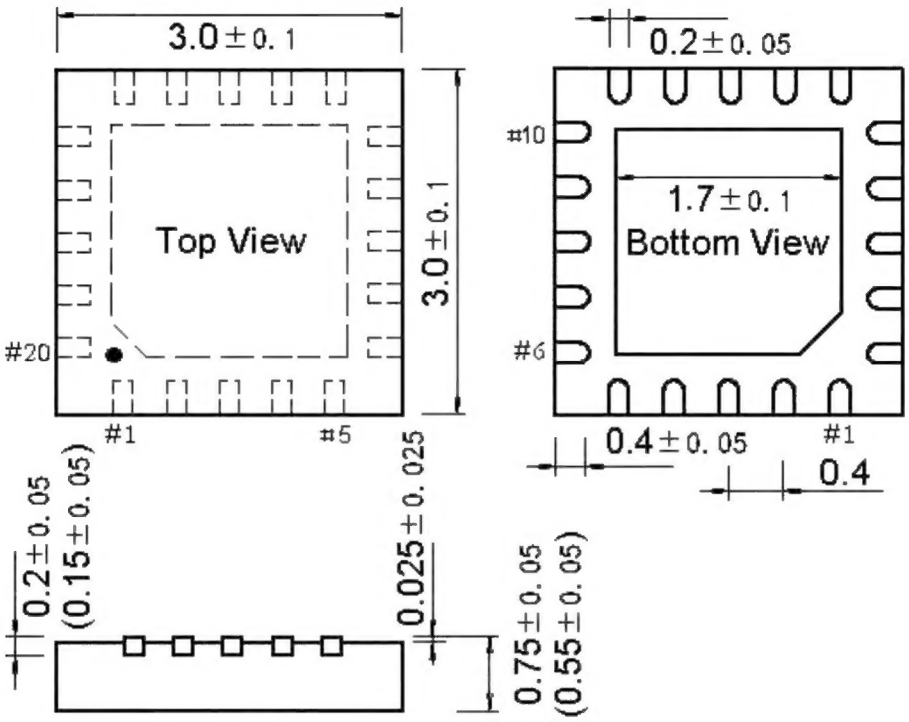

QFN20_3X3

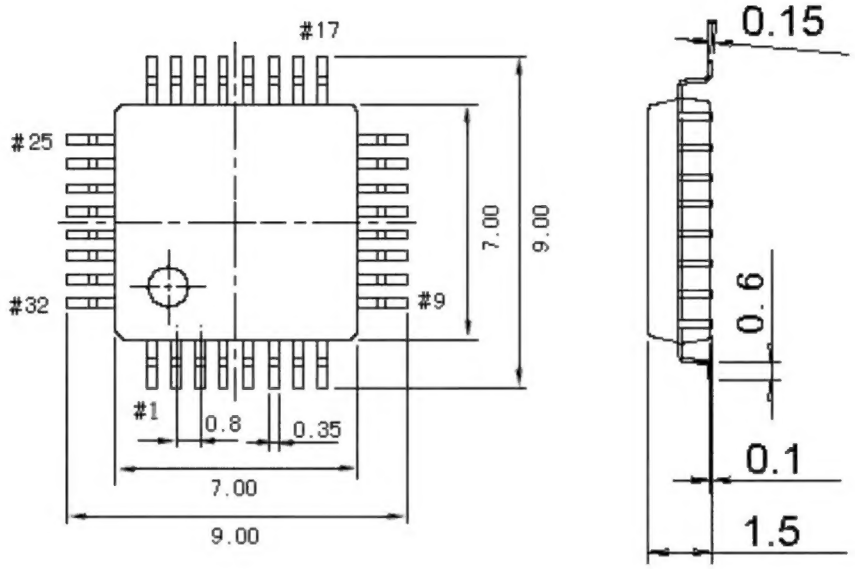

LQFP32

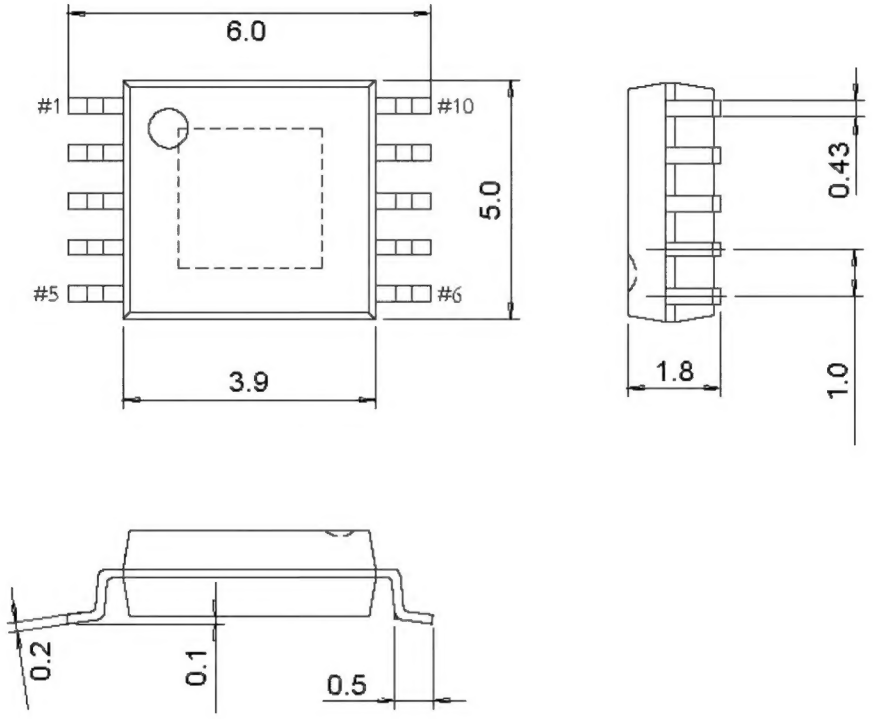

ESSOP10

Chapter 22 Revision history

Revision	Date	Description
V0.9	September 26, 2019	First release
V1.0	April 11, 2020	Official release
V1.1	July 10, 2020	Current parameters, RX sensitivity and TX power in Section 20.3 adjusted.
V1.2	September 15, 2020	BLE communication distance added. Parameters of current and PLL adjusted in Section 20.3. Considering sleep current, the recommended values of capacitors and DCDC inductors modified.
V1.3	October 21, 2020	Typos of temperature sensor corrected. The recommended values of capacitors and inductors modified.
V1.4	November 06, 2020	R8_BAT_DET_CFG default value, tip that PB15 and PB14 can not be GPIO after enabling debugging interfaces
V1.5	November 20, 2020	Default values in Table 2-3 modified. In Section 6.3, R16_CLK_SYS_CFG modified and description of count mode of timer added. Section 10.5 about SPI timing added. Calculation of R8_TKEY_COUNT in Section 16.2 corrected.
V1.6	January 18, 2021	Note ADC calibration channel. Note that ADC of CH571 does not support DMA. Note that [9:8] of R16_PB_INT_EN/MODE/IF correspond to PB23 and PB22.
V1.7	March 01, 2021	CH571K added. Features of multiple interrupt registers corrected, such as PFIC_IACTR, etc.
V1.8	Semptember 22, 2021	Description of R8_GLOB_RESET_KEEP updated. The figures of packages updated, with size marked.
V1.9	December 23, 2021	CH573Q added. Note that USB pins should not be connected to external resistors in series.
V1.10	January 20, 2022	Auxiliary power adjustment control register should be 16-bit if write operation is needed, that is, R16_AUX_POWER_ADJ. Typos corrected: DMA address register only supports the lower 14 bits, and supports the latter 16KB RAM.
V1.11	April 19, 2022	Note added: For CH573Q and CH571K, the RX sensitivity is -93dBm as they are limited by the package.
V1.12	June 27, 2022	ESSOP10 package added. Typos corrected: RB_ADC_BUF_EN should be set to 0 for temperature sensor sampling.